This is a digital copy of a book that was preserved for generations on library shelves before it was carefully scanned by Google as part of a project to make the world's books discoverable online.

It has survived long enough for the copyright to expire and the book to enter the public domain. A public domain book is one that was never subject to copyright or whose legal copyright term has expired. Whether a book is in the public domain may vary country to country. Public domain books are our gateways to the past, representing a wealth of history, culture and knowledge that's often difficult to discover.

Marks, notations and other marginalia present in the original volume will appear in this file - a reminder of this book's long journey from the publisher to a library and finally to you.

Usage guidelines

Google is proud to partner with libraries to digitize public domain materials and make them widely accessible. Public domain books belong to the public and we are merely their custodians. Nevertheless, this work is expensive, so in order to keep providing this resource, we have taken steps to prevent abuse by commercial parties, including placing technical restrictions on automated querying.

We also ask that you:

+ *Make non-commercial use of the files* We designed Google Book Search for use by individuals, and we request that you use these files for personal, non-commercial purposes.

+ *Refrain from automated querying* Do not send automated queries of any sort to Google's system: If you are conducting research on machine translation, optical character recognition or other areas where access to a large amount of text is helpful, please contact us. We encourage the use of public domain materials for these purposes and may be able to help.

+ *Maintain attribution* The Google "watermark" you see on each file is essential for informing people about this project and helping them find additional materials through Google Book Search. Please do not remove it.

+ *Keep it legal* Whatever your use, remember that you are responsible for ensuring that what you are doing is legal. Do not assume that just because we believe a book is in the public domain for users in the United States, that the work is also in the public domain for users in other countries. Whether a book is still in copyright varies from country to country, and we can't offer guidance on whether any specific use of any specific book is allowed. Please do not assume that a book's appearance in Google Book Search means it can be used in any manner anywhere in the world. Copyright infringement liability can be quite severe.

About Google Book Search

Google's mission is to organize the world's information and to make it universally accessible and useful. Google Book Search helps readers discover the world's books while helping authors and publishers reach new audiences. You can search through the full text of this book on the web at `http://books.google.com/`

B 464200

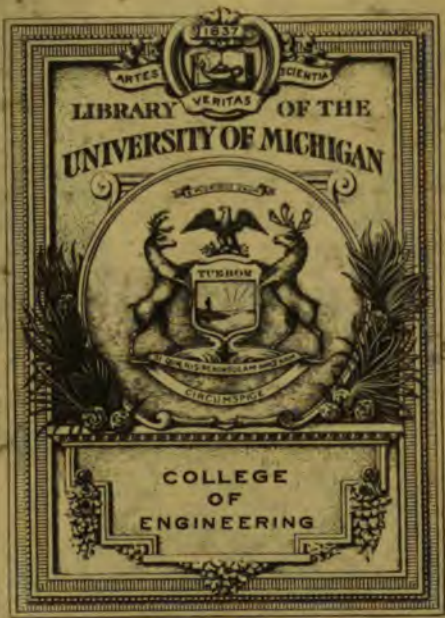

THE GIFT OF
Mr. David Molitor

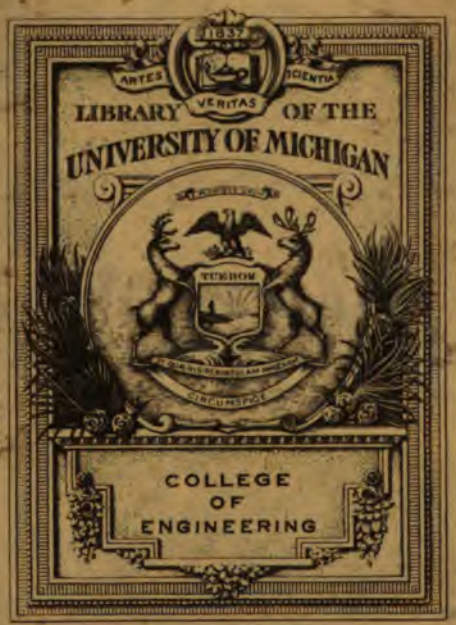

THE GIFT OF
Mr. David Molitor

Engin. Library
TD
897
.N333
1902

David Molitor
Mar. 1906

TRADES WASTE.

CHARLES GRIFFIN & CO., Ltd., Publishers.

WORKS SUITABLE FOR MUNICIPAL AND COUNTY ENGINEERS, ANALYSTS, AND OTHERS.

In Crown 8vo. Handsome Cloth. With many Illustrations in the Text. Price $2.50 net.

SANITARY ENGINEERING:

A Practical Manual of Town Drainage and Sewage and Refuse Disposal.

By FRANCIS WOOD, A.M.Inst.C.E., F.G.S.,

Borough Engineer and Surveyor, Fulham; Late Borough Engineer, Bacup, Lancs.

"A book which in many respects may be considered complete of its kind. . . . . Invariably interesting and suggestive"—*Public Health Engineer.*

"BRISTLES WITH INFORMATION that will be greedily read by those in search of practical assistance. . . . . The book is one that OUGHT TO BE ON THE BOOKSHELVES OF EVERY PRACTICAL SANITARY ENGINEER."—*Sanitary Journal.*

SECOND EDITION, Thoroughly Revised. Strongly Bound in Leather, Gilt. 620 pages. Illustrated. $3.50 net.

A HANDBOOK OF HYGIENE.

By LT.-COLONEL DAVIES, D.P.H.Camb.,

Late Assistant-Professor of Hygiene, Army Medical School; and Late Bacteriologist, Army Headquarters, India.

GENERAL CONTENTS.—Air and Ventilation—Water and Water Supply—Food and Dieting—Removal and Disposal of Sewage—Habitations—Personal Hygiene—Soils and Sites—Climate and Meteorology—Causation and Prevention of Disease—Disinfection.

"We know of NO OTHER VOLUME which furnishes so much real information in so small a compass."—*British Medical Journal* (March 1, 1902).

Sewage Disposal Works: A Guide to the Construction of Works for the Prevention of the Pollution by Sewage of Rivers and Estuaries. By W. SANTO CRIMP, M.Inst.C.E., F.G.S. SECOND EDITION, Revised and Enlarged. Large 8vo, Handsome Cloth. With 37 Plates. $6.50 net.

Calcareous Cements: Their Nature, Preparation, and Uses. With some Remarks upon Cement Testing. By GILBERT REDGRAVE, Assoc.Inst.C.E. Large Crown 8vo. With Illustrations, Analytical Data, and Appendices on Costs, etc. $2.75 net.

Gas Manufacture (The Chemistry of). A Handbook on the Production, Purification, and Testing of Illuminating Gas and the Assay of the Bye-Product of Gas Manufacture. By W. J. A. BUTTERFIELD, M.A., F.I.C., F.C.S. With numerous Illustrations. SECOND EDITION, Revised and Enlarged. With a Section on ACETYLENE. $3.00 net.

Central Electrical Stations: Their Design, Organisation, and Management, including the Generation and Distribution of Electrical Energy. By C. H. WORDINGHAM, A.K.C., M.Inst.C.E., late Member of Council, Institute of Electrical Engineers; Consulting Engineer to the City of Manchester. With numerous Plates, Diagrams, and Illustrations. $7.50 net.

Road Making and Maintenance: A Practical Treatise for Engineers, Surveyors, and others. With a Historical Sketch of Ancient and Modern Practice. By THOMAS AITKEN, Assoc. M.Inst.C.E. With numerous Plates, Diagrams, and Illustrations. $6.00 net.

Dairy Chemistry: A Practical Handbook for Dairy Managers, Chemists, and Analysts. By H. DROOP RICHMOND, F.C.S., Chemist to the Aylesbury Dairy Company. With Tables, Illustrations, etc. Handsome Cloth. $4.00 net.

Flesh Foods: With Methods for their Chemical, Microscopical, and Bacteriological Examination. A Handbook for Medical Men, Inspectors, Analysts, and others. By C. AINSWORTH MITCHELL, B.A., F.I.C., Mem. Council Soc. of Public Analysts. With numerous Illustrations, and a Coloured Plate. $3.00 net.

Detailed Catalogue Post Free on Application.

London: Charles Griffin & Co., Ltd., Exeter St., Strand.

Philadelphia: J. B. Lippincott Company.

TRADES WASTE:

ITS TREATMENT AND UTILISATION.

WITH SPECIAL REFERENCE TO THE PREVENTION OF RIVERS POLLUTION.

A HANDBOOK FOR BOROUGH ENGINEERS, SURVEYORS, ARCHITECTS AND ANALYSTS.

BY

W. NAYLOR,

F.C.S., A.M.INST.C.E.; MEMBER OF THE INCORPORATED ASSOCIATION OF MUNICIPAL AND COUNTY ENGINEERS; CHIEF INSPECTOR OF RIVERS, RIBBLE JOINT COMMITTEE; CONSULTING ENGINEER ON SANITATION AND RIVERS POLLUTION TO THE SOMERSET COUNTY COUNCIL AND OTHER PUBLIC BODIES.

With 21 Plates, 27 Folding Diagrams, and Numerous Illustrations in the Text.

LONDON:
CHARLES GRIFFIN & COMPANY, LIMITED.
PHILADELPHIA: J. B. LIPPINCOTT COMPANY.
1902.

[*All Rights Reserved.*]

Engin. Lib
Gift
Mr. David Moliter
4-7-1922

PREFACE.

THIS treatise aims at setting forth the causes of Rivers Pollution and also the best known practical means of preventing such pollution—economically. The utilisation of trades waste, except where Rivers Pollution is concerned, is only touched upon, as to do more would require a special volume.

So far as I am aware, this is the first publication, of any length, devoted to the subject as a whole, hence throughout the book it will be observed that copious extracts from various sources have been made, but in every instance it appeared to me that these particular extracts illustrated or explained the subject in hand so thoroughly that any attempt at a paraphrase on my part would, while withholding credit from the proper parties, fail to lay the facts before the reader in so clear a manner.

To the best of my knowledge and endeavour all such extracts have been duly acknowledged, and I wish to express my thanks here for the permission to quote so kindly granted in every case.

It will probably appear to readers actually engaged in the processes referred to that some of the preliminary observations in each chapter dealing with the *origin* of the waste are both rudimentary and incomplete; but to detail fully the origin and character of the crude waste from every factory would have been quite beyond the scope of the volume.

The customary sources only are instanced, and these not for the benefit of the manufacturer alone but for general engineering or chemical readers who are from time to time consulted as to the installation of purification plant, or for officials called upon to report upon the pollution of streams.

No one particular system of treatment is to be considered as specially advantageous, but an attempt has been made to point out the principles, characteristics, and advantages of each, so that, to suit any particular case, a combination of any or all could easily be devised.

My thanks are due and hereby tendered to my assistants, Messrs T. W. Waddington, F. Whalley, A. Higginson and W. C. Evans, for help in the analytical work and preparation of drawings, and to the various firms referred to in the volume for the use of plant for experimental observations, etc.

W. N.

COUNTY OFFICES, PRESTON,
May 1902.

CONTENTS.

PAGE

LIST OF PLATES, ... x

LIST OF ILLUSTRATIONS AND DIAGRAMS, ... xi

LIST OF ANALYSTS WHOSE RESULTS ARE QUOTED, ... xv

LIST OF AUTHORS' NAMES QUOTED, ... xv

LIST OF PUBLICATIONS QUOTED, ... xvi

CHAPTER I.

INTRODUCTION.

The prominent position occupied at present by the subject of this volume—Past and Present Attitude of Manufacturers in Matters of Rivers Pollution Prevention—Rivers Pollution Commission, 1868—Belgium, Fishing Streams *versus* Trade—*Raison d'être* of the '76 Act—The Extent of Purification desirable—Standards of Purity—Recommendations of First Royal Commission thereon—The Desirability of Tentative Standards, . 1—14

CHAPTER II.

CHEMICAL ENGINEERING.

Trades Waste generally either Liquid or Semi-solid—Suspended Solid Particles—Laws concerning Solid Particles floating in Liquids—Descending Velocities—Simple Subsidence—Aggregation of Particles—Theory of Precipitation—Manufacture of Precipitants—The Plant at Chorley for Crude Alumina-ferric—The Mixing of Precipitants—Typical Mixers—Baffles—The Mather & Platt System—The Candy Tank—The Fülner Tank—Continental Tank Systems—The Construction of Precipitation Tanks—Design of Retaining Walls for resisting Hydraulic Pressures—Formulæ concerned—Specifications for Material—Examples of Faulty Construction—Sludge Abstraction—Special forms of Sludge Removal Apparatus—The Use of Compressed Air for Agitation, Sludge Pressing and Power—Air Compression—Losses due to Heating—Injection of Cooling Water—Calladon's Spray Cooling Compressor—'Toggle' Levers—Sludge Lifting—Chain Pumps—Ram Pumps—Compressed Air Ejectors—Filtration—Slow Speed Sand or Cinder Filters—High Pressure or 'Express' Filters—The Candy Clarifier—The 'Riddell' Filter—'Torrent' Filter—Birch Filter—Bacterial Filters—Distributing Sprinkler—Estimation of Dissolved and Suspended Solids, ... 15-71

CHAPTER III.

Woollen Mill Waste.

PAGE

Nature of Sheep's Wool—Fatty Acids—Wool Fats—Neutral Fats—Waxes—Unsaponifiable Matter—Methods of examining Wool and Wool Fats—Cholesterin—Recovery of Grease by 'Cracking'—Soap Decomposition—Character of Mother Liquors—Royal Commissioners' Suggestions—Yolk Ash—Biggart & Co.'s System—Motte & Co.'s System—System at Messrs Fox Bros., Wellington—Character of Crude and Treated Liquors—The Distillation of the Recovered Fat—Examination of the Distillates—Purified Oleine and Stearine—The Process of Messrs W. Scaife & Co.—Results—Messrs Smith & Leach's Patents—Wool Fat in Sewage—The Difficulty at Bradford—Special Powers under the Bradford Improvements Act—Degreasing by Means of Fat Solvents—The Singer & Judell Degreasing Machine—The Reichenbach Solvent Machine—Trials—Cost of Working, ... 72–124

CHAPTER IV.

Tanning and Fellmongery.

Nature and Origin of Waste—Royal Commissioners' Suggestions—Chemical Oxidation—Oxidation by Bacterial Agency—Massachusetts Experiments—The Bacterial Treatment of Sewage at Sutton—Anaërobic Decomposition—The Septic System—The Investigations at Belle Isle, Exeter—The Stoddart Filter—The Whittaker & Bryant System—The Trials at Coppy Clough—Typical Tanning Waste Purification Plant—The Pullman and Payne Liming Process—Duplex or Triplex Bacterial Filters for Tan Pits Liquor, ... 125–143

CHAPTER V.

Brewery and Distillery Waste.

Cleanliness in the Brewery—Nature and Origin of the Waste—Malt Extract—Wash from Mash Tun—The Copper—The Hop Beck—Cooler and Refrigerator—Fermentation Vat—Cask Washings—Souring—Lactic Ferments—Souring prevented by mixing with Putrid Sewage—Experiments with Starch Paste—Bleach Works Kier Liquors—Old Ale—Distillery Waste—The Plant at the Hook Norton Brewery—Trials of Same, ... 144–163

CHAPTER VI.

Calico Bleaching and Dyeing.

The Sizes used in Spinning and Weaving—Processes of Bleaching—The Character and Relative Volume of Liquid Waste at each Stage—Analysis of Cloth after Steep, Lime Boil, Soda Boil, Sour, Chemic, and White Box—Character of the Soda Boil—Character of the Lime Boil—Typical

PAGE

Purification Plant—The Plant at Messrs Stanning & Co., Leyland—Trial Runs—The Sludge—Mechanical Filtration—Bacterial Treatment—The Plant at Messrs Peel, Tootal & Co.—Trial Run, ... 164–180

CHAPTER VII.

CALICO PRINTING AND DYEING.

Nature of Waste Liquids—Materials Used—Thickenings—Difficulties due to Gelatinous Thickenings—Precipitate formed but Retained in Suspension—Aggregation or Weighting Necessary—The Separation of Soaping Liquors—Agitation by Aëration—The Sludge Produced—Mather & Platt's System—Trials at the Standish Co.'s Works—Solubility of old Sludge—Trials of Messrs Steiner's Plant—Recovery of Chrome—Disposal of Sludge, ... 181–201

CHAPTER VIII.

PAPER MAKING WASTE.

Outline of Paper Making Process—Soda Liquors before and after addition of Wash Waters—Recovery of Soda—Multiple Effect Evaporators—Theory of Same—Practical Working—Trial at Darwen Mill—Evaporation of Stronger Liquors—The Porion Evaporator—Practical Working and Cost—Kestner Barometric Evaporator—The Amount of Matter washed out of Fibrous Raw Stuffs—Fibre Catchers—Typical Plant—Darwen Paper Mill—King's Norton Paper Mill—Burnley Paper Mill—Cheddar Paper Mill—Sun Paper Mill—Messrs Peebles & Co.—Lower Darwen Mill—Incrustations from Paper Waste—Bacterial Treatment of Paper Waste—Waste from Wood Pulp Mills, ... 202–228

CHAPTER IX.

GENERAL CHEMICAL WASTE.

Distillation of Ammoniacal Liquors—Nature of Still Liquors—Plant at Krupp's Works, Essen—Precipitation by Lime and Basic Sulphate of Alumina—Aëration—Recovery of Sulphocyanides—Soap Manufacture—Treatment of Lyes—Glycerine Recovery—Scott's Vacuum Plant—Alkali Works—Waste Chloride from Solvay Process—The Leblanc Process—Vat Waste—Its Characteristics—Chance's Sulphur Recovery Process—Residual Mud—Yellow Liquors—Composition and Objectional Features—Their Action on Life in Streams—Treatment—Colliery Wash Waters—Exemptions under Rivers Pollution Acts—Coal Washing—Forms of Washers—Nature of Wash Waters—Forms of Purification Plant—Iron Galvanising—Acid Nature of Waste—Injury to Sewers—Effect on Treatment of Sewage at the Outfall Works—Wolverhampton Sewage—Parker's Method of Pickling—Turner's Acid Recovery Process, ... 229–263

INDEX, ... 264

LIST OF PLATES.

PLATE			
I.	The 'Mather & Platt' System at Messrs Rylands & Sons, Chorley,	*To face page*	24
II.	The Candy 'Upward Flow' Tank, Barrowford,	,,	24
III.	Paper Mill at Darwen—Collapsed Wall in Precipitation Tanks,	,,	32
IV.	Paper Mill, Darwen—Tanks as rebuilt,	,,	32
V.	Blackburn Corporation Sludge Pressing Plant,	,,	40
VI.	Birch's Precipitation Tanks at Oakenshaw Print Works, Accrington,	,,	64
VII.	Thermal Aërobic Filters, Accrington Sewage Works,	,,	132
VIII.	Farington Sewage Works, Preston Rural District Council,	,,	134
IX.	Fountains Free Brewery Co., Ltd., Blackburn, Anti-Scouring Tank and Sprinkler Filter,	,,	162
X.	Precipitation Tanks, Messrs Stannings & Co., Ltd., Leyland,	,,	172
XI.	Precipitation Tanks, The Whalley Abbey Co., near Blackburn,	,,	172
XII.	Bleach Department Precipitation Tanks, Messrs Grafton & Co., Accrington,	,,	176
XIII.	Messrs Peel, Tootal & Co., Tanks and Sprinkled Filter,	,,	178
XIV.	Dyeing Department Tanks, Messrs Grafton & Co., Accrington,	,,	183
XV.	Precipitation Tanks, Messrs Steiner & Co., Ltd., Church,	,,	196
XVI.	Low Mill Bleaching and Printing Co., Precipitation Tanks,	,,	196
XVII.	Precipitation Tanks with Furnace in rear, Messrs Kearns, Allen & Co., Baxenden,	,,	198
XVIII.	Darwen Paper Mill Precipitation Tanks,	,,	216
XIX.	Burnley Paper Co.'s Precipitation Tanks,	,,	218
XX.	Precipitation Tanks, Sun Paper Mill, Feniscowles, near Blackburn,	,,	218
XXI.	Precipitation Tanks and Sludge Drainers, Messrs Peebles & Co., Ltd., Rishton Paper Mill,	,,	220

LIST OF ILLUSTRATIONS AND DIAGRAMS.

		PAGE
Fig. 1.	Chorley Corporation Crude Sulphate of Alumina Plant,	20
,, 2.	Chorley Corporation Crude Sulphate of Alumina Plant, Upper Floor,	20
,, 3.	Chorley Corporation Crude Sulphate of Alumina Plant, Ground Floor,	21
,, 4.	The 'Rapid' Precipitant Mixer,	22
,, 5.	A Common Agitator,	23
,, 6.	The 'Whisk' Pecipitant Mixer,	23
,, 7.	Wolstenholme's Lime Mixer,	24
Diag. 1, Fig. 8.	Protector for Precipitant Mixer Spindle Foot,	*To face page* 24
,, ,, 9.	Plan and Section of Baffle Plate Channel and Cage for Precipitant Cake,	,, 24
,, 2, ,, 10.	Messrs Mather & Platt's System of treating Waste Liquors at Heapey Bleach Works, near Chorley,	,, 25
,, 3, ,, 11.	The Candy Upward Flow Precipitation Tank,	,, 25
,, 4, ,, 12.	The Fülner Patent Stuff Catcher,	,, 26
Figs. 13, 14, 15, 16.	Section of Sub-divided Precipitation Tanks,	27
Diag. 5, Fig. 17.	Plan of a Series of Sub-divided Precipitation Tanks,	*To face page* 27
,, ,, 18.	Section of a Series of Sub-divided Precipitation Tanks,	,, 27
Fig. 19.	Section of a Wall,	29
,, 20.	Section of a Wall showing sloping Joint,	30
,, 21.	Paper Mill Precipitation Tanks as first built,	32
,, 22.	Paper Mill Precipitation Tanks as rebuilt,	33
,, 23.	Mill near Blackburn, Precipitation Tanks as first built,	33
,, 24.	Paper Mill near Accrington, Plan of Precipitation Tanks,	34
,, 25.	Tanks as first built at a Paper Mill near Burnley,	35
,, 26.	Paper Mill near Burnley, Tanks as rebuilt,	35
,, 27.	Bleach Works near Horwich, Plan of Precipitation Tanks,	35
Diag. 6, Fig. 28.	The 'Climax' Float Valve,	*To face page* 36
,, ,, 29.	Wolstenholme's Floating Arm,	,, 36
,, ,, 30.	The 'Ives' Precipitation Tank,	,, 36
,, ,, 31.	Fidler's Patent Revolving Scraper (Ham, Baker & Co.'s),	,, 36
Diag. 7. ,, 32.	The Candy Horizontal Sludge Remover,	,, 37
,, ,, 33.	Section of Sludge Press,	,, 37
,, ,, 34.	Sectional Plan showing end Pair of Press Plates,	,, 37

PAGE

Fig. 35. Sludge Press, ... 39
,, 36. Arrangement of Sludge Reception Tanks, with Relation to Sludge Press. Messrs Johnson's, ... 39
,, 37. Plan of Waste Air Utilisation Apparatus at Barnhurst Sewage Works, Wolverhampton, ... 40
Diag. 8. Fig. 37A. Section of Waste Air Utilisation Apparatus at Barnhurst Sewage Works, Wolverhampton, . . . *To face page* 39
Fig. 38. A Common Type of Air Compressor, ... 41
,, 39. Diagram of Air Cylinder Water Jacketed Compressor, Barnhurst Sewage Works, Wolverhampton, ... 42
,, 40. Actual Diagram showing Defects, ... 42
,, 41. Calladon's Water Spray Compressor, ... 44
,, 42. De la Vergne Compressor, ... 45
Diag. 9, Fig. 43. The Taylor Patent Air Compressor without Water Jacket, ... *To face page* 46
,, ,, ,, 44. The Taylor Patent Air Compressor, Section through Air Cylinder, ... ,, 46
Fig. 45. Taylor's Air Compressor, Diagrams of Air and Steam Cylinders, ... 47
,, 46. Roach Bridge Paper Mill, near Preston, Diagram of Compressor, Air Cylinder, ... 48
,, 47. Gould's Triplex Power Stuff Pump, ... 49
,, 48. Evans' 'Reliable' Reversible Double Acting Steam Pump with Piston Valve, ... 50
,, 49. Piston Valve arrangement of Evans' 'Reliable' Pump, . . . 50
,, 50. Evans' Cornish Steam Pump, with long distance piece and without tappets, ... 51
,, 50A. Cornish Steam Pump Ball Valves, ... 51
,, 51. The Worthington Pump, ... 52
,, 51A. The Worthington Sewage Valve, ... 53
,, 52. Evans' 'Duplex' Steam Pump, ... 54
,, 53. Shone's Compressed Air Ejector, ... 55
,, 54. Reducing Valve for Air Ejectors, ... 56
,, 54A. Bradshaw's 'Griffin Curtis' Reducing Valve, ... 57
,, 55. The Candy Clarifier, ... 59
,, 56. The 'Riddell' Pressure Filter, ... 61
,, 57. The 'Riddell' Filter, L. & N.-W. Rly. Co.'s Gas Works, Crewe, ... 62
,, 58. The 'Torrent' Pressure Filter, ... 63
Diag. 10, Fig. 59. The Birch Tanks and Filter, ... *To face page* 64
Fig. 60. The Birch Filter, ... 64
,, 61. A Filter Sprinkler, ... 65
,, 62. The 'Candy-Caink' Sprinkler, ... 67
,, 63. The 'Whittaker-Bryant' Sprinkler, ... 68
,, 64. Cylinders (Gladding's) used in the Examination of Manufacturers' Waste Liquors, ... 70
,, 65. The Gooch Filter used in the Examination of Manufacturers' Waste Liquors, ... 70
Diag. 11, Fig. 66. Section of Precipitation Tanks, Messrs Fox Bros., Wellington, Somerset, ... *To face page* 89

PAGE

Diag. 11, Fig. 66A. Section of Precipitation Tanks, Messrs Fox Bros., Wellington, Somerset, ... *To face page* 89
,, ,, ,, 66B. Plan of Precipitation Tanks, Messrs Fox Bros., Wellington, Somerset, ... ,, 89
,, 12, ,, 67. Wool-grease Distillation Plant, ... ,, 91
Fig. 68. Wool Fat Separator, ... 97
,, 69. Messrs Fawcett, Preston & Co., and C. M. Matthey's Patent Separator or 'Centrifuger,' 98
,, 70. Grease Recovery, Revolving Gas Furnace for Ash Calcining, . . 101
,, 71. Wool Degreasing Installation, ... 102
,, 71A. Deiss's Apparatus for Oil Extraction, ... 110
Diag. 13, Fig. 71B, 71D, Messrs Singer & Judell's Wool (Solvent) Scouring Machine, ... *To face page* 112
,, 14, ,, 71C, 71E, 71F. Messrs Singer & Judell's Wool (Solvent) Scouring Machine, ... ,, 113
,, 15. ,, 72. Reichenbach's Wool Scouring (Solvent) Machine, ,, 117
Fig. 73. Septic Tanks and Thermal Aërobic Filters for the Treatment of Tannery Waste, ... 138
,, 74. Magnetic Filters, Messrs Allsopp's Brewery, Darwen, ... 150
,, 75. Hook Norton Brewery Co.'s Purification Plant, ... 158
,, 76. Hook Norton Brewery Purification Plant, ... 159
Diag. 16, Fig. 77. The Free Fountains Brewery Co., Blackburn, Anti-souring Tanks and Bacterial Filters, . . . *To face page* 162
,, 17, ,, 78. Plan of Tanks, Messrs Stanning & Co., Ltd., Leyland, ... ,, 172
,, 18, ,, 79. Messrs Stanning's Straining Filter, ... ,, 174
Fig. 80. Bleach Department Precipitation Tanks, Messrs Grafton & Co., Accrington, ... 177
,, 81. Precipitation Tanks and Bacterial Filter, Messrs Peel, Tootal & Co., Accrington, ... 178
,, 82. Plan of Contact Beds, designed for Messrs Stanning & Co., Leyland, ... 179
,, 83. Dyeing Department Tanks, Messrs Grafton & Co., Accrington, ... 184
Diag. 19, Fig. 84. Precipitation Tanks, Messrs Steiner & Co., Church, *To face page* 196
,, ,, ,, 85. Section of Messrs Steiner's Plant, ... ,, 196
,, 20, ,, 86, 86A, 86B. Plan, Indigo Dye and Print Co., Adlington, ... ,, 198
,, 21. ,, 87. Section of Kearn's Chrome Recovery Furnace, . ,, 198
,, ,, ,, 88. Section of Kearn's Chrome Recovery Furnace, . ,, 198
,, ,, ,, 89. Horizontal Section of Kearn's Chrome Recovery Furnace, ... ,, 198
Fig. 90A. Plan of Complete Arrangement of Messrs Fawcett, Preston & Co.'s Triple Effect Evaporator, ... 205
,, 90B. End Elevation of Messrs Chapman & Fawcett's Multiple Effect Evaporator, ... 206
,, 90C. Elevation of Messrs Chapman & Fawcett's Multiple Effect Evaporator, ... 206
Diag. 22, Fig. 91. The 'Yaryan' Multiple Effect Evaporator, . . *To face page* 205
Fig. 92. The 'Yaryan' Multiple Effect Evaporator, ... 205

PAGE

Figs. 93 and 94. Kestner Barometric Evaporator, ... 209
Fig. 95. Porion Evaporator, ... 211
,, 96. Wandel's Fibre Catcher, ... 214
Diag. 23, Fig. 97. Darwen Paper Mill, Precipitation Tanks, . . *To face page* 216
Fig. 98. Tanks and Sludge Press, Cheddar Paper Mill, Somerset, . . . 217
Diag. 24, Fig. 99. Purification Plant at Messrs Baldwin's Paper Mill, King's Norton, Birmingham, ... *To face page* 218
Fig. 100. Burnley Paper Co., Precipitation Tanks, ... 219
Diag. 25, Fig. 101. Sun Paper Mill, Precipitation Tanks, Feniscowles, near Blackburn, ... *To face page* 218
,, 26. ,, 102. Precipitation Tanks, Lower Darwen Paper Mill, . ,, 220
,, 27. ,, 103. Precipitation Tanks, Rishton Paper Mill, . . ,, 220
,, ,, ,, 104. Precipitation Tanks and Filters, Whiteash Paper Mill, Accrington, ... ,, 220
Fig. 105. Plan and Section, Tanks for Ammonia Still Residues, Krupp's Works, Essen, ... 230
,, 106. Plan and Section Tanks, for Ammonia Still Residues, Messrs Metcalf & Co., Ltd., Church, ... 233
,, 107. Scott's (Glycerine) Vacuum Evaporator, ... 236
,, 108, 109. Carbonators, Chance's Sulphur Recovery Process, . . 241, 242
,, 109A. Klaus Kiln, ... 243
,, 110. Filters for Alkali Waste Drainage, Messrs J. Riley & Sons, Hapton, ... 247
,, 111, 112. Coal Washing Machines, ... 250, 251
Diag. 28, Figs. 113–16. Arrangements for Settlement of Coal Washing Waters, ... *To face page* 252
Figs. 117A, 117B, 117C. Turner's Hydrochloric Acid Recovery Process, . 259, 261

LIST OF ANALYSTS WHOSE RESULTS ARE QUOTED.

Ahrens, Klingenstein and Schubert, 227.
Burghardt, C. A., 222.
Chevreul, 73.
Davis, G. E., 238.
Dibdin and Thudichum, 162.
Fleck, H., 81.
Frank, H., 225.
Gerland, B. W., 169, 245.
Heron, J., 144.
Hill, A. B., 244.
Hummel, J. J., 74.
Kingzett, C. T., 235.
Lang, R. W., 148.
Marcker and Schulze, 83.
Maumène and Rogelet, 83.
Muspratt and Dawson, 239.
O'Sullivan, C., 145.
Ribble Joint Committee Proceedings, 132, 183, 195, 224.
Richardson, F. W., 77.
Rideal, S., 129.
Rimmington, F. M., 77.
Rivers' Pollution Commission Report, 1868, 78, 79.
Schunck, Ed., 167.
Wilson, H. Maclean, 253.

LIST OF AUTHORS' NAMES QUOTED.

Allen, A. H., 76.
Benedikt, R., 26.
Boutraux, 148.
Bowman, 167.
Bruck, E., 225.
Buddeus, W., 226.
Buisine, A., 73, 82.
Callon, 17.
Chance, A. M., 240.
Chandelon, 84.
Davis, G. E., 210.
Fitz, 148.
Fleck, H., 11, 81.
Frankland, P. F., 147.
Gasch, A., 3.
Gianoli, G., 79.
Griffin, 226.
Hendrick, J. W., 162.
Hinckley, J. W., 17.
Hummel, J. J., 74, 84.
Jenkins, W. J., 42.
Kingzett, C. T., 239.
Lang, R. W., 148.
Lewkowitsch, J., 75.
Little, 226.
Lunge, G., 230.
Mansbridge, W., 91.
Marcker and Schulze, 75.
Marsaut, M., 17.
Moritz, G. H., 151.
Procter, H. R., 135.
Rankine, W. J. M., 16.
Regelsberger, J., 209.
Rideal, S., 129.
Rittinger, P. von, 16.
Schulze, B., 75.
Schunck, 167.
Smith, Watson, 108.
Stoddart, F. W., 131.
Warington, R., 127.
Watt, H., 76.

LIST OF PUBLICATIONS QUOTED.

The numbers following the italics refer to the pages of this work on which the extracts will be found.

Proceedings of the Institution of Civil Engineers, 1, 17, 153.
Third Report of the Rivers Pollution Commission, 1868, 3, 6, 11, 78, 151.
Report of Dr Petermann, Director of the State Agricultural Station, Belgium, 5.
Dr Fleck's twelfth and thirteenth *Annual Reports, König. Chem. Centralstelle im Dresden*, 11, 81.
Journal of the Society of Chemical Industry, 15, 17, 75, 108, 144, 148, 240.
Rankine's *Applied Mechanics*, 16.
Cours de l'École des Mines, 17.
Die Abwasser der Fabriker, 26.
Rivington's *Building Construction*, 28.
Spon's *Supplement to Engineering Dictionary*, 43.
Journal of the Society of Dyers and Colorists, 73, 79, 82, 167.
Chemiker Zeitung, 73, 82, 225.
Comptes Rendus de l'Académie des Sciences, 73, 148.
Hummel's *Dyeing of Textile Fabrics*, 74.
Berichte der deutschen chemischen Gesellschaft, 75, 148.
Watts' *Organic Chemistry*, 76.
Allen's *Commercial Organic Analysis*, 76.
Reports to the Bradford City Council, 86.
Lewkowitsch and Benedikt's *Oils, Fats and Waxes*, 90.
Chemical News, 91, 201.
Bradford Tramway and Improvement Act, 1897, 106.
Proceedings of the Ribble Joint Committee, 125, 132, 149, 183 to 196.
Report of the Massachusetts State Board of Health, 1890, 126.
Journal of the Sanitary Institute, 1897, 129.
Public Health Engineer, 131.
Journal of the Society of Arts, 135.
Thorpe's *Dictionary of Applied Chemistry*, 147.
Transactions of the Laboratory Club, 151.
Transactions of the Aberdeen Congress of the Royal Institute of Public Health, 1900, 162.
Patent Specification No. 15,208, 1896 (Kearns'), 198.
Proceedings of the West Riding of Yorkshire Rivers' Board (Coal Washing), 249.
Wien Jahresbericht, 1887 (page 1177), 225.
Griffin and Little's *Chemistry of Paper Making*, 226.
Papier Zeitung, 226.
Zeitschr. f. angew. Chemie, 227.
Lunge's *Coal Tar and Ammonia*, 230.
Kingzett's *The Alkali Trade*, 239.

TRADES WASTE.

CHAPTER I.

INTRODUCTION.

THE question of rivers pollution is now so prominently before all Local Governing bodies and manufacturing interests, and the general drift of opinion and legislation in Great Britain seems so likely to ensure the prominence of this subject for some time to come, that at the request of the Publishers of this volume I consented to expand into this form a contribution I made to the *Proceedings of the Institute of Civil Engineers* * on the treatment of Trades Waste. But the fact that the subject is now receiving so much attention at the hands of engineers, chemists, and bacteriologists, must not be attributed to any sudden increase either in the extent or degree of contamination to which rivers have been all along subjected. Neither is it due to the fact that the recently formed County Councils have been over-eager to put their newly acquired powers into operation, or that they have put them into operation at all without due consideration. The latter observation is suggested by a circular posted to the various members of the Paper Makers' Association by its secretary in March 1897, of which the following is the opening paragraph:—

"*Rivers Pollution (Prevention) Act.*

"It is felt that the present method of administering these Acts is likely to be attended with grave consequences to the Trade and Industry of Lancashire.

"The law, as you are aware, is contained in an Act passed in 1876 called 'The Rivers Pollution (Prevention) Act,' which Act was, until the coming into force of the Local Government Act, 1888, administered by the various Local Sanitary Authorities, such as Municipal Corporations and Local Boards, in their separate areas. Since 1890, however, the administration of the law has in Lancashire been entrusted to two Boards or Com-

* Vol. cxii.

mittees called respectively the Mersey and Irwell Joint Committee and the Ribble Joint Committee. The Committees have engaged expensive staffs of officials and inspectors, who have to justify their existence by visits and reports which are, as a rule, made monthly when the Committees meet. The Mersey and Irwell Committee have also succeeded in obtaining a private Act containing some stringent provisions, and affording less protection to Manufacturers than the general Act of 1876, and more than one attempt has been made by the County Councils to procure an alteration in the general law on the lines of the Mersey and Irwell Act.

"It is believed that if the result of the working of these two Committees could be ascertained, it would show that they have caused a capital outlay to be made on works within their jurisdiction to an amount considerably exceeding £5,000,000; the interest and sinking fund of which may be calculated with sufficient accuracy for the purpose of this statement at 5 per cent. upon the total, making a dead yearly sum of £250,000; and, in addition to this, the Manufacturers have had to expend on their own account a large capital outlay in respect of their works and factories, besides incurring a heavy annual expenditure for their working and maintenance."

The statement that "the law . . . was, until the coming into force of the Local Government Act of 1888, administered by the various Local Sanitary Authorities," is not strictly correct; in fact, the cause of much of the burden suddenly put upon manufacturers in 1888 was the failure of the Local Sanitary Authorities to administer the Rivers Pollution (Prevention) Act, which had really been on the Statute Book for a period of twelve years prior to that date. There was just as much reason for the administration of the Act of 1876 before the Local Government Board Act of 1888 as there is to-day.

The trouble began about thirty or forty years ago, very soon after the great impetus given to British industry by the development of the steam engine, railways, and ocean-going steamers.

When, after the Great Exhibition in 1851, the nation had completed its exultation over the great strides made in Science and Art, and when it had finished comparing the exports, imports, revenue, population, and capital invested in the year 1830 with those of the year 1850, it was observed that increased production meant increase in objectionable waste products, and that the same result occurred from an increase in population.

After a considerable number of actions at common law for damages due to pollution suffered by private individuals had been heard, the attention of Parliament was called to the apparent necessity for further legislation on the matter, and a Rivers Pollution Commission was appointed about the year 1867. The reports of these Commissioners, by far the best production on the subject in any language up to the present day, were the result of most

careful inquiry, inquiry thoroughly scientific in its character and therefore unprejudiced, and the conclusions are almost reliable even now.

Before any conclusions were arrived at, manufacturers were fully and fairly heard, and nothing was suggested in the reports, nor embodied in the Act eventually passed, likely to prejudice the interests of British industries.

The Commissioners found the rivers grossly polluted, and they also found that a good deal of this pollution could be prevented and that it ought to be prevented.

Speaking of the Yorkshire rivers in the third report,* they say :—

"These rivers are indeed subject, in common with those flowing through agricultural districts (as the Thames and Lea), to pollution with sewage from tanneries, breweries, malting and other ordinary trades, and from exceptional manufactures, such as paper making, etc.; but beyond all doubt their characteristic peculiarity is that derived from the different processes incidental to the worsted and woollen trade. To those who are familiar with the West Riding of Yorkshire it may seem unnecessary to describe the condition of the rivers which form the subject of this report, and yet it may well be doubted whether that very familiarity may not have rendered them all but unconscious of a state of visible pollution which strikes a stranger from the non-manufacturing districts with astonishment.

"Moreover, it is certain that very few persons even in the district possess an intimate knowledge of the causes of this pollution, or can estimate their individual influence on the general result.

"With very few exceptions the streams of the West Riding of Yorkshire run with a liquid which has more the appearance of ink than water.

"In the higher part of the country, as is shown in another part of this report, the water is of the purest description; but as it arrives at any point where conditions for the establishment of a woollen mill are sufficiently favourable, so does the character of the water commence to deteriorate, becoming fouler and more foul after leaving each successive mill, till, as has been abundantly shown by the evidence, the stream has to be abandoned as a source of water either for domestic supply or for manufacturing purposes (otherwise than furnishing power), and is looked upon and treated as little better than an open drain."

There is not the least exaggeration about this description; in fact much more might be said.

The condition of these rivers, as well as some of those in Lancashire, falls in with a word painting of a polluted stream which occurs in an article by Adolph Gasch, Vienna, and which I venture to reproduce :—

* Vol. i. p. xxi.

"Yonder, for instance, we see a fell-monger wash in time-honoured fashion his skins, recently treated by caustic lime, in holes in the ground through which passes the water of a public water-course, in order to cleanse them from the lime and hair which may have been burnt off.

"Close beside him the paper maker, educated in chemical science, steeps his crude rags in lyes, after which he exposes them for bleaching purposes to the influence of free chlorine, and both the lyes and free chlorine find their way in the waste waters to the river.

"At another spot close by the water is milky in appearance, due to the very fine particles of wood and resin unretained by the finest copper gauze of the sieves in the saw-mill, and which particles also now are hurried along in the waste water to the stream.

"The manufacturer of cellulose, a dangerous rival to the owner of the last establishment, is desirous of bringing out the woody fibre in longer threads by chemical means. He removes the resin which binds the fibres together by strong potash lyes, and afterwards washes out both resin and lyes into the stream, without troubling himself with the consequences which may result.

"From the opposite bank there flows a black stream, the refuse water from a colliery which washes the coal before its submission to red heat, from its finely powdered carboniferous as well as from its argillaceous attachments.

"At another spot, where the water is still pure before it reaches him, a dyer enjoys the sight of it so beautiful and clear, and the next moment pollutes it with the most varied colours by the final washings of his coloured cloths or wools, thereby annoying all the manufacturers situated down the river, for they advance claims to pure water for their work.

"Apparently harmlessly, but in reality dangerously, the waste water from chemical wool-washing and carbonizing establishments enters the stream.

"This acid water which leaves the carbonizing establishment of course acts injuriously on all vegetable and animal matter so long as it is not neutralised by any base or diluted to harmlessness by immense quantities of water.

"Thereto come also from the fulleries clay and soap liquors, from the shoddy factories the dust produced by the tearing up of old cloth and the particles of wool fibre which have fallen off; then from the gas works the spent ammoniacal liquors and even the tar water; from the flax and hemp steeping, the refuse steep water, etc., etc.

"The dye works contribute most largely to the foul pollutions. They empty their becks after the contents are done with into the river, or, as already remarked, wash the fabric from excess colour, and so foul the water of the public stream with all the colours of the rainbow.

"It would be difficult here to enumerate every article which is used as

a colouring matter. Chemistry in its vigorous youth takes care that every moment a new colouring matter shall be discovered or at least modified.

"Only the army of aniline colours can here be mentioned which at one time were wholly poisonous but which, of late, in some factories at least, are said to be entirely harmless. It is certain that these colouring matters are not quite harmless and neutral, for the conception of a dye includes the supposition that it fixes itself in the stuff to be dyed, whether of animal or vegetable origin, even if the stuffs to be coloured must first be mordanted.

"After taking up these different substances the erstwhile crystal river becomes finally a mixture of water, particles of wood, earth, dust, fat, soap, coal, wool, hairs, and different chemical ingredients and colours, a blue black, slow-moving fluid."

It will be probably agreed by most manufacturers that such a state of things as this ought not to exist. It will probably be agreed that such a condition of things *need not* exist. There is a medium between reckless insanitary pollution and the shutting down of an industry in a futile attempt to preserve fishing streams. Dr L. Petermann, Director to the State Agricultural Station, Belgium, states:—

"It is, indeed, an exaggeration to demand, as has been done, a system of purification so complete that water, having undergone treatment, shall contain neither ammonia, sulphuric acid, nitrous acid, or any organic matter capable of reducing Fehling's solution;* nor any organic ferment, nor 'algæ' or their germs characteristic of impure water (*Beggiatoa*, *Cladothrix*). In fact, the committee for the improvement of fisheries have even insisted on the absence of anything injurious to fish in purified effluents on their immediate issue from the factory, and therefore undiluted. In this matter Dr Weigelt remarks that the income of German river fisheries amounts to eight million of francs, whilst the value of products obtained by manufactures which give rise to refuse water, is eight thousand millions. The same condition of affairs must exist in Belgium. Nevertheless, this authority cannot be regarded as prejudiced, since he was one of the principal instigators of the movement which has been set on foot for the protection of fisheries, and was prizeman in the open contest on that question in the Belgian Academy (Monsieur de Selys-Longchamp's Prize).

"An appreciable improvement, from an hygienic point of view, a noticeable decrease in the complaints and claims of river proprietors and fishermen, would certainly already have obtained if the measures which are adopted all over the country imposed what I might call 'a relative purification,' by which discharged effluents—

1. Should no longer make the stream slimy or muddy.
2. Should contain neither the remains of beetroot or cosettes.

* Referring to beet sugar factories.

3. Should not contain any perceptibly greater proportion of mineral or organic matter in solution or suspension, whether the water be taken from the stream either above or below the outlet.
4. Should not show by biological examination, unaided by chemical reagents, the presence of ammonia, sulphuric acid, hydrocarbons, or saline or putrescible matter.
5. Should only possess a slightly acid or alkaline reaction, to be detected by litmus paper, but not by reagents more sensitive.
6. Should be mixed with running water, and consequently diluted and ærated to an extent no longer poisonous to fish.
7. This approximate purification, the maximum of what can be reasonably and justly demanded, but which is far from what obtains at present, can be carried out by well-known processes.

"If such is not the case, it is want of care in the application, not in the principle, which is at fault."

One of the strongest arguments in favour of the prevention of rivers pollution, is that by the discharge of an unpolluted effluent in the upper reaches of the stream, manufacturers lower down will be able to draw largely from the stream water for manufacturing purposes, instead of being compelled, as they are at present, to provide themselves with expensive private gathering grounds, which are becoming daily more and more in demand for potable supplies.

If, then, it be agreed that the prevention of pollution of rivers to some extent at least is desirable, the fact that the administration of the law should be in the hands of an authority controlling a river or basin of rivers from source to sea, has been proved by the failure of sub-divided authorities to administer it. The failure of the conglomeration of the authorities to administer the Act was anticipated by the Rivers Pollution Commission,* as the following rather lengthy, but nevertheless interesting, extract shows:—

"*Defects of Existing Law relating to Rivers Pollution.*

"The law, as it at present exists, is only applicable to local and individual cases. There is no power of general application. One town or one manufacturer may be proceeded against, but there is no authority having the means and the power to deal with nuisances throughout an entire drainage area.

"We found the law relative to the pollution of these rivers to be the subject of general and well-grounded dissatisfaction. Theoretically, the law recognises that protection is due to public and private rights, in running water. It prohibits all public nuisances, and imposes upon each riparian proprietor

* Vol. i. p. li.

the obligation of allowing running water to pass on in its course without obstruction or pollution. But a person, judging from the present appearance of the streams in the West Riding, would infer the contrary to be the law, and would conclude that there existed a general license to commit every kind of river abuse. For, as we have shown to be the fact, the rivers and streams are polluted with sewage and dye-waste, and, except where special legislation for navigation purposes obtains, their course is obstructed by the casting in of solid rubbish. The cause of this variance between the law and the practice is to be found in the difficulties of enforcing the law and the exceptions which are allowed to it.

"So far as river abuses affect only private rights, each individual is left to protect himself by putting the law in motion. An aggrieved proprietor has the option of bringing an action for damages in Common Law Courts, or of filing a bill in Chancery for an injunction. Either course is necessarily invidious, expensive, and doubtful in its result. It is invidious, because neighbour is set against neighbour, and because it must seem unjust that one manufacturer should be proceeded against and mulcted for doing that which hundreds of others, who do not happen to offend a powerful neighbour, are doing with impunity. It is an expensive remedy. For the same money which is spent over a hardly-fought litigation against a single manufacturer, a Conservancy Board, armed with proper powers, might for years keep safe from all abuse a long extent of the river with hundreds of manufactories situated on its banks. The expense incurred by the Aire and Calder Navigation in preventing solid materials from being cast into the navigable channel (for this is the limit of their powers) is very trifling indeed. Legal proceedings are also a very doubtful remedy. The plaintiff may prove that he has suffered injury from the pollution of the river, and that the defendant has polluted the river above him; but this is not enough. The plaintiff has also to prove that what he has suffered has been caused wholly or in part by the special act of the defendant, which is often difficult —often impossible. For besides the defendant there is probably a multitude of manufacturers who, at various points higher up the stream, cast in liquid refuse from their works; these impurities are carried down by the stream, and by the time they reach the plaintiff's works they are all mingled confusedly together, and the offence of the defendant has ceased to be distinguishable. The plaintiff accordingly fails to establish his case.

"Even where successful, these private attempts to protect the river are but little gain to the public. Several instances have come before us where a manufacturer, sued for polluting running water, has brought the litigation to a close, not by ceasing to foul the river but by simply removing the discharge into the river to a point below the works of the complainant.

"Further, the law recognises prescriptive rights to pollute running water and obstruct its flow, provided such abuse falls short of public nuisance.

Such rights we do not hesitate to call privileged abuse. A manufacturer who, in the exercise of a right so acquired, discharges into the river a solid and liquid refuse from his works, may thereby do injury to the river to the extent of many times the money value of the right. But the loss to the public is too serious to be measured by a money standard. If some are permitted to pollute or obstruct the river, it is in vain that others abstain from abusing it. Thus by the maintenance of exceptions the law discourages those who are well disposed, and renders ineffectual voluntary combination, even upon a large scale, amongst manufacturers to preserve the river. More than this, the law actually holds out a premium to those who abuse the river. A manufacturer is tempted to go on casting solid and liquid refuse into the river in order to establish a new right or to keep alive an old one.

"The law prohibiting river abuse, when it amounts to a public nuisance, is not open to the same objection, because no length of toleration is held to justify a public nuisance on the ground that the discharge of his waste renders the water of the river opaque, discoloured, unsightly, and quite unfit to drink, provided no smell is occasioned and there is no danger to public health. Again, in the neighbourhood of large towns it has come to be thought that a river foul with sewage is inevitable; inhabitants are reluctant to come forward as witnesses to denounce that to which they have become long familiar, and in like manner jurymen are slow to find such things to constitute a public nuisance. In the case of sewage pollution it is not usually difficult (as it is in the case of pollution from manufactory refuse) to trace the offence home, but however serious the evil, it is very difficult to find a prosecutor, for the principal offenders are the governing bodies of large towns. These do not prosecute one another, for the reason that each is guilty of the same offence towards his neighbour; and they are rarely prosecuted by private persons, because few are willing to bear the expense and odium of acting as public prosecutors. To institute legal proceedings against a large town with a view to compel it to adopt a different mode of disposing of its sewage, at a cost perhaps of many thousand pounds, is to provoke a wealthy adversary to a conflict in which every step will be contested. The expense of such a litigation generally exceeds the value of the personal interest of any individual in the stoppage of the nuisance. Accordingly, whatever the inconvenience of the public, the nuisance continues unabated. Rich and poor alike submit to it as a sort of destiny."

If, after the passing of the Act in 1876, its administration had been taken up in earnest by the authorities having power so to do, as was the Alkali Works Regulation Act, a great deal might, from a very small beginning, have been accomplished, and that much more easily than it can be accomplished now. Manufacturers would have had time to permit purification

plant to grow from small beginnings. Land on which to instal plant might have been obtained which cannot now be procured, and machinery might have been put down, and drains laid at levels which would have permitted the interception of the drainage without the resort to pumping now in many cases necessary. But this was not done. Manufacturers are just as much to blame themselves as anybody. In many cases it was due to their opposition as large ratepayers, or to their personal influence on the local governing authorities, that the Act remained a dead-letter. It now remains for them or their successors to complete at once an undertaking which should have been in hand during the past thirty years.

In many cases the open question is not, How shall this work of purification be done? but, How much ought to be done? and, in some cases, How *little* need be done?

How little must be done?

From a strictly commercial point of view (and the right of a manufacturer to take the latter point of view can hardly be disputed), this is a fair question.

When he sets up his bleach works or paper mill, his aim and desire is, essentially, to turn out a finished product for which he expects a price. His real business is to extract a valuable component from its associated objectionable material, the latter being naturally contained in his waste liquors.

While he admits that the whole of the objectionable matters abstracted are not desired in the stream by his neighbours, or at any rate by some portion of the community, he knows very well that to deprive his waste liquors of the whole of them is a commercial impossibility. His so-called clean water varies, to begin with, from a potable supply up to a coloured and polluted river water; and in cases where his business is not actually the abstraction, by washing, of an objectionable ingredient from a crude substance, but the winning of a valuable product from its worthless associated bodies, no longer valuable after the withdrawal of the desideratum, as in the case of the distillation of spirit from fermented wort, ammonia from ammoniacal liquors, lixiviation liquors from solid materials, etc., he asks, at what point between the actual distillation and condensation of these residual waste liquors or semi-solids and a settlement or deposition, more or less perfect, is he permitted by the law to stop.

At the present moment the only reply he gets is that he is even armed with special outlet rights to employ the "best known reasonable means."

Outside a court of law the authority administering the Act is the sole judge as to what constitutes these means, and that authority is, of course, guided largely by its officials.

That this state of affairs should be considered undesirable by the manufacturer is not the least surprising. The officials themselves are liable to be replaced at any moment by others who may hold somewhat different

opinions; and in any event these officials, as a rule, know little of the technicalities of the trade involved, and it is questionable whether in some cases they are fully able to appreciate whether, having regard to all the circumstances of the case, reasonable means have been adopted or not. Bearing in mind, too, that the desired result—namely, the elimination of objectionable matters either in suspension or in solution—can be brought about by many different means, involving great variation in cost both in construction and maintenance, surely the *result* and not the means employed ought to be the main point for the authority to concentrate its attention upon. Furthermore, there is some difference of opinion even to-day as to what is and what is not objectionable in a stream, and until this is definitely settled any discussion as to whether the best reasonable means or otherwise have been adopted must be fettered.

If in his difference with the authority a manufacturer appeals to the Law Courts, the disputants bring forward rival expert witnesses who claim to be certain that their conclusions are correct and founded on sound scientific bases, notwithstanding the wide differences between them, and the decision of the judge, when he does not shirk forming one altogether, is in many cases formed on a purely legal side issue having practically no bearing on the principles involved. In this way a manufacturer is often put to needless expense, and industry suffers.

On the other hand, a judge deciding on the adoption of reasonable means may have his own particular view, differing from that of other judges, so causing the Rivers Pollution Act, as administered in one part of England, to produce results quite different to those produced by its administration in another part. A case in point was that of the Long Ashton Rural District Council *v.* S. Cox & Son, tanners, in the County Court of Bristol, August 1896. In this case His Honor Judge Austin, in giving his judgment, said:—

> "He had to find out whether the defendant had used the best practicable and reasonably available means. It was a conclusion he shrank from to say that a man who had called in the best advice and who had honestly and in good faith tried to carry it out, should be told to close his factory because another chemist came along and said the result was unsatisfactory. He had come to the conclusion, that though the result was unsatisfactory, Mr Cox had satisfied him that he was using the best practicable means to render the noxious effluent harmless, and therefore he had no power to deal with him. Judgment would be for the defendant with costs." *

It would appear from this judgment, and more clearly *from the whole of*

* Extract from local paper.

the facts connected with the case, that so long as a manufacturer polluting a stream admittedly to a great extent, can say that he has followed the advice of A, B, or C in good faith, it matters little what C, D, E, F, or G may say to the contrary.

The only way out of this difficulty is the adoption of a standard. At the present time, however, it is anything but fashionable to advocate the adoption of standards. Nevertheless, a standard has got to come.

In his twelfth and thirteenth annual reports to the Könige Chem. Centralstelle in Dresden, Dr H. Fleck remarks:—

"It is a very frequently recurring phenomenon that whenever hygienic or technical questions reach the point where they can be subjected to a superficial examination either in conversation or in the public press, the more difficult they appear to the specialist who can really understand the questions at issue, the more easy are the solutions of them supposed to be; and on the other hand, where the correct solutions lie close at hand, and where, in fact, only slight technical knowledge is required in order to perceive them, the public, as a rule, regard the problems as most difficult."

If these remarks apply to anything they apply to the question of standards of purity under the Rivers Pollution Act.

None of the bodies of scientists which have ever given this question a consideration was more fitted to form a correct opinion than the Royal Commission on Rivers Pollution appointed in 1868.

After coming to certain conclusions on the matter, these were embodied in certain questions submitted to Baron von Liebig and to M. Dumas.

The following are the questions and replies:—

Questions.

(1) Is it desirable that the gross pollution of English rivers by sewage and by the liquid refuse of manufacturers should be prevented by legislative enactment?

(2) Assuming this to be the case, is it desirable, in the interest of both manufacturers and the public, that definition of standards of polluting liquids, such as the following, should be fixed by Act of Parliament?

(*a*) Any liquid containing, *in suspension*, more than three parts per weight of dry mineral matter, or one part by weight of dry organic matter, in 100,000 parts by weight of the liquid.

(*b*) Any liquid containing, *in solution*, in 100,000 parts by weight more than two parts by weight of organic carbon, or ·3 part by weight of organic nitrogen.

(*c*) Any liquid which shall exhibit by daylight a distinct colour when a stratum of it one inch deep is placed in a white porcelain or earthenware vessel.

(*d*) Any liquid which contains, in solution, in 100,000 parts by weight, more than two parts by weight of any metal, except calcium, magnesium, potassium, and sodium.

(*e*) Any liquid which, in 100,000 parts by weight, contains, *whether in solution or in suspension*, in chemical combination or otherwise, more than ·05 part by weight of metallic arsenic.

(*f*) Any liquid which, after acidification with sulphuric acid, contains, in 100,000 parts by weight, more than one part by weight of free chlorine.

(*g*) Any liquid which contains, in 100,000 parts by weight, more than one part by weight of sulphur, in the condition either of sulphuretted hydrogen or of a soluble sulphuret.

(*h*) Any liquid possessing an acidity greater than that which is produced by adding two parts by weight of real muriatic acid to 1000 parts by weight of distilled water.

(*i*) Any liquid possessing an alkalinity greater than that produced by adding one part by weight of dry caustic soda to a thousand parts by weight of distilled water.

(*k*) Any liquid exhibiting a film of petroleum or hydrocarbon oil upon its surface, or containing in suspension in 100,000 parts, more than ·05 part of such oil.

(3) Are these standards fair and reasonable?

Replies.

MUNICH, 23*rd April* 1872.

If I were commissioned by the Bavarian Parliament, in the interest of the public health, to make proposals with the object of preventing the pollution of rivers and streams, I should, after my present consideration of the subject, simply adopt the recommendations which you have made in your first Report on the Mersey and Ribble Basins. They are simple, appropriate, and founded upon a thorough acquaintance with the subject. And when the Legislature prohibits the manufacturer from fouling rivers and streams with the refuse of his manufacture, I hold it to be right and just that the manufacturer shall also be protected from an empirical interpretation of the law and from unjust prosecution. I answer, in accordance with these principles, the questions submitted to me as follows:—

(1) I hold it to be distinctly desirable, and, in the interest of the public health, necessary, that the gross pollution of the English rivers and streams by sewage and refuse of all sorts from manufactories should be prohibited by legislative enactment.

(2) I am further of opinion that in this case it is for the interest of the public in general and of the manufacturers, that definite standards of 'pollution,' and what is understood by this term,

should be determined in number, measure and colour by the Legislature, so that every one may know his duty, and be protected from empirical annoyance.

(3) I am of opinion that the standards of polluting liquids given in the first Report on the Mersey and Ribble Basins, which are identical with those mentioned in the 33rd clause of the Public Health Bill (p. 16 (1) to (9)), are good, and are applicable to the purpose intended; they are simple, easily executed, and every manufacturer can easily comply with the conditions imposed upon him by this clause.

I trust that this explanation may contribute to the support of your endeavours for the improvement of a condition of things the abolition of which is exceedingly important for the health of the people; one can only wonder that it has not been achieved long ago.

(Signed) Js. Liebig.

Paris, 26*th April* 1872.

Although I had intended to answer your letter immediately, yet I was obliged to allow some days to pass in order to put myself in communication on the subject with some people whose advice might be required later by our Government.

Only a few years ago I had to combat the opinion that rivers are the natural drains of towns, and that it was to make use of them for this purpose that towns were built on their banks. I maintained that rivers and the atmosphere ought to be respected, and that no one had the right to pollute the one or to poison the other. I demanded consequently that all towns and manufactories should be compelled to purify the water which passes through them, or to protect them all from contamination. The unhappy state of our country may yet delay the application of these principles, but they will some day enter into our legislation; it was therefore necessary to ascertain whether there was a disposition to receive your proposals.

As to my own sentiments there was no doubt. Agreeing with you as to the principle itself, I had only to consider whether, in the details, you had exaggerated the precautions or omitted any circumstance worthy of notice. I had expressed my opinion in the following terms:—"Whenever water was so affected by a town or a manufacturer as to become unfit for supporting the life of fish or green plants, the pollution, from whatever cause derived, should be considered as an insupportable nuisance to the riparian population." I accept all your definition to the effect that, even where the cause has not been ascertained by chemical analysis, all water which has become unfit to support the life of fish shall be considered as having received a pollution from which it must be purified.

It may assuredly contain noxious organic matters, the weight of which is outside the indicated limit, and which, though noxious in the extreme, would escape your standards. Such are the oily products of the manufacture of gas, etc. With this qualification, I accord my entire approval to your scheme, and I wish it may be carried out promptly both in England and in France. (Signed) DUMAS.

It is quite possible that the standards as here set forth would not be the best to-day. What is wanted is some standard less drastic, and one which can be varied from time to time, as have been the standards under the Alkali Works Regulation Acts, in accordance with the development and perfection of methods of treatment or the discovery of new.

Furthermore, it is questionable whether a uniform standard could be applied to all trades. Nevertheless, different branches of industry could be grouped up, and a standard applied to each group, without danger either of complications or tedious ramifications.

The particular degree of purity which could be reasonably attained by manufacturers in the different branches of industry will be dealt with in the chapters following.

CHAPTER II.

CHEMICAL ENGINEERING.

By far the greater part of trades waste is in a liquid state, and where it happens to be solid the difficulty of dealing with it, its subsequent utilisation apart, is not great, a tipping place being the only desideratum for solids inert in character, and not liable to give rise to nuisance or pollution of streams through their disintegration or through the solvent action of surface water.

In the *Journal of the Society of Chemical Industry* the various industries are divided in twenty-two classes. Of these, only five—machinery, manures, photography, fine chemicals, and electro-metallurgy—may be said to have no liquid waste of consequence as to volume, while the remaining seventeen have both liquid and solid wastes, in most cases the liquid preponderating.

In most of these cases, too, the objectionable constituents of the liquid waste are both in solution and suspension. In a few instances they are almost entirely in suspension—*i.e.*, coal washing, coke slaking, and cement making; while in a few, such as alkali works, they are almost entirely in solution.

So far as suspended matter is concerned it may be considered generally, without the differentiation of industries, under three divisions:—

1. Matter having a specific gravity distinctly higher than its supporting liquid medium.
2. That having a specific gravity about equal to its supporting medium.
3. That having a specific gravity distinctly lower than its supporting medium.

The downward velocity due to gravity of a solid particle falling in a stationary liquid medium of lower specific gravity depends on the resistance offered by the medium (the thrust of the fluid, and resistance due to viscosity), and therefore to the surface contact of the particle and its density.

If, for instance, such a particle of any mass be spheroidal in shape, it will have less surface contact, and be less subject to frictional resistance than a particle of the same mass which may have the form of a flake, and which will, of course, fall with a lesser velocity. Since, however, the frictional

resistance is rarely sufficiently great to impede entirely the downward motion, complete settlement in a stationary tank is only a matter of time. But it does happen, and very frequently, that while some portion of the suspended matter falls quickly, as a deposit, at the tank bottom, a certain portion, consisting of flaky, fibrous, or exceedingly fine particles, remains almost stationary in a supporting medium of lower specific gravity. These particles present the greatest difficulty in abstraction.

P. von Rittinger found that *separate particles* falling in water soon reach a limiting velocity, small pieces of one millimetre reaching it under half a second, and large pieces of 16 mms. diameter in less than one second, as exemplified in the following table :—

Nature of Substance.	Specific Gravity.	Transverse Dimensions.	Values of the Velocity in				
			½ sec.	¼ sec.	⅛ sec.	1 sec.	2 secs.
		millimetre.	metre.	metre.	metre.	metre.	metre.
Galena, ...	7·5	16	·903	1·444	1·630	1·650	1·650
Pyrites, ...	5·0	16	·825	1·174	1·287	1·293	1·293
Quartz, ...	2·6	16	·570	·767	·801	·817	·817
Galena, ...	7·5	4	·704	·814	·823	·824	·824
Pyrites, ...	5·0	4	·586	·643	·646	·646	·646
Quartz, ...	2·6	4	·383	·409	·409	·409	·409
Galena, ...	7·5	1	·409	·413	·414	·414	·414
Pyrites, ...	5·0	1	·321	·323	·323	·323	·323
Quartz, ...	2·6	1	·203	·204	·204	·204	·204

From a number of experiments made, the following formula was deduced :—

Velocity in feet per second $= 1{\cdot}28\ \sqrt{D(d-1)}$, where
D = diameter (largest) of particle in inches.
$d = S_1G_1$ of substance, and $1{\cdot}28$ = a Constant.

Rankine* states that the pressure of a current upon a solid body floating or immersed in it would be equal in opposite directions and have nothing for its resultant if fluids moved without friction. But because of the energy of diverted streams which glance from the body being to a greater or less extent expended in fluid friction the pressure on the back of the solid body becomes less intense than the pressure on the front, and to the resultant pressure in the direction of the current thus arising has to be added the resultant of the direct friction of the fluid against the surface of the body.

* *Applied Mechanics.*

It is known that the force can be approximately represented by a formula of this kind:

$$F = KeA\frac{V^2}{2g}$$

for the Resistance substitute R for F. In this formula, A is the greatest cross section of the particle; e the weight of a unit volume of the fluid; and K a co-efficient depending on the figure of the body.

K = ·77 for a cylinder moving sideways; ·51 for a sphere; and 2·00 for a thin hollow hemisphere moving hollow foremost.

For a prism with wedge-shaped ends the co-efficient equals that for a prism with flat-shaped ends multiplied by $(1 - \cos \beta)$ where $\beta = \frac{1}{2}$ angle of wedge (doubtful).

J. W. Hinckley * puts the equation of motion:

$$Kd(G-1)g - Lv^n = Kd\frac{dv}{dt},$$

where K is a constant; d, diameter of particle; G, specific gravity of particle; g, the acceleration due to gravity; t, time.

Resistance (for round particles) then becomes:

$$Ld^2v^n \text{ and } Lv^2 = Kd(G-1)g,$$

where L is a constant, and n a number which for low velocities is 1, but changes at a critical speed to 1·6–1·8.

Callon † gives as the equation for the movement of a particle in still water:

$$\frac{Ka^3D}{g}j = Ka^3D - K_1a^2u^2\delta,$$

where u = velocity and j the acceleration of the particle; a^2 = maximum horizontal section, and Ka^3 consequently its volume; D = Density of particle, and δ = Density of water or liquid.

Where the water itself has a perpendicular movement, v, for the resultant velocity, it is necessary to modify the last term of the equation, which becomes according as the motion is up or down

$$\frac{Ka^3D}{g}j = Ka^3D - Ka^3\delta - K_1a^2(u \mp v)^2\delta.$$

As was shown by M. Marsaut,‡ where there is no initial velocity of the particle or water the last term may be deleted, since $u = o$, and $u \mp v = o$, the equation becoming,

$$\frac{Ka^3D}{g}j = Ka^3D - Ka^3\delta. \qquad j = g\left(1 - \frac{\delta}{D}\right),$$

or the acceleration of the particle is dependent upon density only.

* *Soc. Chem. Ind.*, No. 1. xxi. † *Cours de l'École des Mines*, vol. iii. p. 46.
‡ *Proc. Inst. C.E.*, vol. lxx.

This, however, can only be for graded and round particles, in a liquid free from convection or subsidiary currents of any kind, while Rittinger's experiments on limiting velocities render all formulæ of little use.

Particles under Division I. above which *do* fall, and quickly, are easily disposed of. The only requirement is a settling tank, and the shape of this matters little, local circumstances deciding all details.

Those particles under III. which rise to the surface are also easily dealt with, skimming only being necessary. But those which neither rise nor fall readily (Division II.) are the cause of much labour in clarification. They must be either (1) mechanically intercepted by means of a filter, or (2) borne downwards by a mesh or envelope of matter added, or (3) altered in shape or condition physically so as to bring about their descent or ascent.

The first of these three proposals will be considered later, as it involves the removal of the liquid from its position. The second involves the addition of further weighting or entrapping materials. Substances added as weighting material simply—powdered clay, sand, etc.—have been unsuccessful owing to their too rapid subsidence. A *precipitate* formed in the medium has the desired effect, especially if it be flaky, gelatinous, and fairly heavy. Of the hundreds of precipitants in use, from "common salt," or "sea water," to "calcined alkali waste," lime and salts of iron or alumina are the commonest and most effective.

Admixtures of these in almost every imaginable form are made, sold, and used, but the essential action is based on the decomposition of an iron or aluminium sulphate by the basic lime, a precipitate resulting of (a) calcium sulphate giving the weight (b), iron or aluminium hydrate acting as a mesh.

Of course in special cases the iron salt may be a chloride, already present, when the calcium sulphate would be absent, and the weighting effected by some other inert substance.

The most advantageous proportion in which the lime and salts are to be added can hardly be calculated on the chemical reaction, owing to the presence of disturbing elements in the liquids under treatment. The lime may be affected by carbonic acid, free chlorine, sulphuric acid, sulphurous acid, fats (chemically and physically), putrid organic matter, etc. The iron or alumina salt may be affected by lime or other alkalies already present, fats, dye-stuffs, tannin, etc. As in most industrial operations, the cheaper reagent is used in excess.

The correct proportion is best ascertained by a method of trial and error, for a gelatinous precipitate cannot be regarded as a falling particle. A thorough mixing is necessary, and after that the velocity downwards of the precipitate in still water is affected by the temperature, the density of the supporting medium, and by the physical character of the precipitate itself.

The author noted the effect of various amounts of copperas and lime

added to clean water (town supply) in a tank with glass sides. The tank held about forty gallons. In the first experiment 20 grains of copperas per gallon were added, and lime in exactly equivalent proportion. After thorough admixture the precipitate fell as follows :—

Fall (in inches),	1	2	5	6	9	30
Time (in minutes),	1	2	4	5	7	15

After 9 inches had been reached, the line of demarcation was less distinct.

With 15 grains per gallon and equivalent lime, the following times were observed :—

Fall (in inches),	1	2	3	6	9	30
Time (in minutes),	1	2	3½	7	10	20

An excess of lime improved matters considerably. 20 grains of copperas and 20 grains of lime gave—

Fall (in inches),	1	6	9	12	30
Time (in minutes),	1	4	5	6	10

The same quantities of precipitants added to waste liquors from paper and bleach works gave a precipitate which fell at slower rates, varying between six inches and two feet per hour, and adding more or less to the burden of dissolved solids according to the original composition of the liquid and velocity obtained.

The addition of sulphate of alumina is found beneficial in most dye and print works, as the precipitate of aluminium hydrate has the effect of throwing down colouring matters. It is made in most cases on the works, and used either in a crude state or after being rendered basic. In Lancashire the crude bauxite containing about 40 per cent. Al_2O_3 on the dry, is ground to a fine powder and treated in a lead-lined vessel with common vitriol or chamber acid diluted with water and steamed for about ten minutes. If a solution only is required more water is then added. If, however, only just sufficient water is added to form a paste for 'blowing,' the mass will set hard and can be dug out for use in lumps. Aluminium hydrate or cream is added after the first blowing, if it is required to be basic, an advantage in the cases of most dye liquors, especially Turkey reds.

In the making of precipitants more economy can be usually effected by manufacturers than by local authorities, owing to their having both labour and appliances, and in addition to this they are able to purchase the materials generally at cheaper rates along with other drysaltery. In spite of this, the most complete and convenient plant for the production of crude alumina sulphate for immediate use, in the author's experience, is that at the sewage works of the Chorley Corporation.

In figs. 1, 2, 3, A is a store shed, where the bauxite is allowed to dry. The shed is quite closed from weather, but well ventilated and provided with drying pipes warmed by waste steam. At the point B bauxite

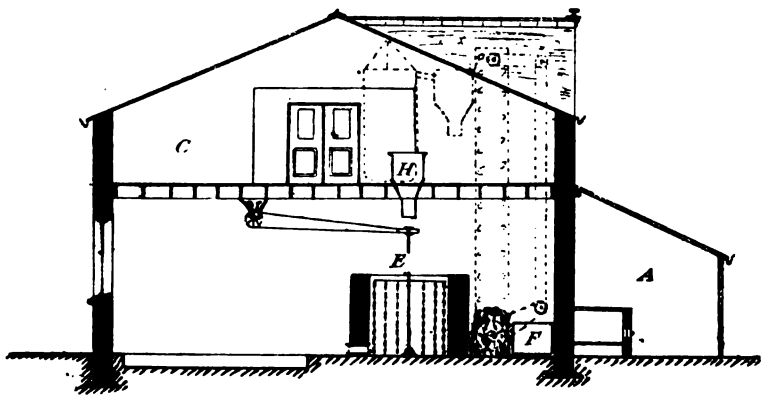

FIG. 1.—Chorley Corporation Crude Sulphate of Alumina Plant.

is delivered by hand labour into a hopper which feeds a Christy & Norris pulverizing machine. It is ground fine, and delivered by a vertical conveyer into the upper storey C, and into bags holding known weights. Sulphuric acid is stored in a tank D, having a capacity of 125 gallons, charged direct from the drums by means of a steam acid elevator P. The charge of acid, 982 lbs., for the mixing tank E is first measured into the smaller tank F, capacity 62 gallons about, while the charge of bauxite, 722 lbs., is delivered from the upper room through the hopper H. Steam is then turned on and the necessary quantity of water, about 500 lbs. more or less, added.

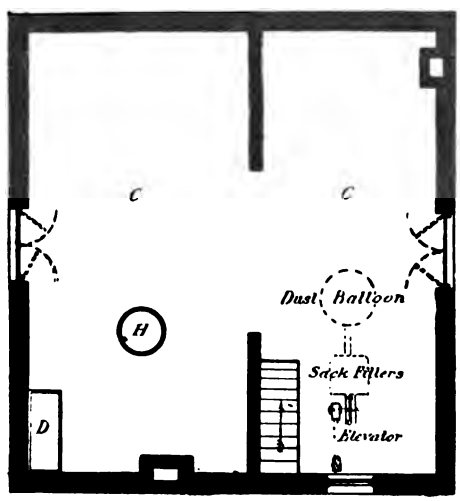

FIG. 2.—Chorley Corporation Crude Sulphate of Alumina Plant. Plan of Upper Floor.

Bauxite is delivered at the Preston Docks at about eleven to fourteen shillings per ton, and at the works at from fifteen to twenty shillings. A sample delivered at sixteen shillings contained—

Moisture, ...	16·18 per cent.
Alumina, ...	27·22 ,,
Gangue, ...	56·60 ,,

For the formation of alumina sulphate about 100 lbs. of actual alumina require 300 lbs. of vitriol; with the above sample, therefore, there were taken—

370 lbs. bauxite.
375 ,, 80 per cent. acid.
150 ,, water.
30 ,, bog ore (waste).

This resulted in a cake of 900 lbs., containing—

Moisture, ...	40·2 per cent.
Sulphate of alumina, . . .	35·9 ,,
Gangue and iron, . . .	23·9 ,,

The cost of the 900 lbs. was, bauxite, two shillings and sixpence; acid, six shillings; labour, steam, etc., one shilling. Apart, therefore, from interest

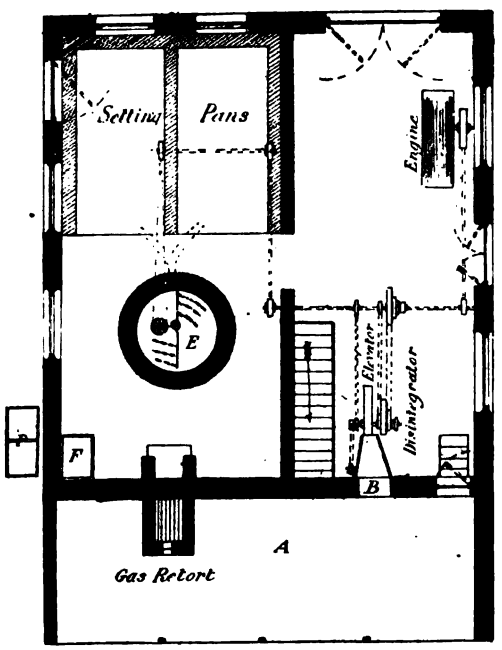

FIG 3.—Chorley Corporation Crude Sulphate of Alumina Plant. Plan of Ground Floor.

on capital and depreciation, the cost is twenty-four shillings per ton, compared with forty-eight shillings per ton, delivered, for the precipitant previously used, having the following compositions:—

Moisture, ...	39·2 per cent
Sulphate of alumina, . . .	40·9 ,,
Gangue, ...	19·9 ,,

The cost of a bigger batch came out in accordance with the following sheet supplied by the Chairman of the Sewage Committee:—

Cost of making 4 tons 17 cwts. 3 qrs. of precipitant at the Chorley Sewage Works, 13th March 1901:

		£	s.	d.
Coal,	2 cwts. 2 qrs. at 12s. 3d. + 1s. 8d. carting = 13s. 11d.	0	1	9
Bauxite,	3509 lbs. at 11s. + 3s. 4d. rail + 4s. 9d. sea freight + 1s. 8d. carting = 20s. 9d.	1	12	6
Acid,	4680 lbs. at 42s. 6d. + 1s. 8d. carting = 44s. 2d.	4	12	3
Labour,	10 hours at 4½d.	0	3	9
Labour and power,	2 hours grinding bauxite,	0	2	2
		£6	12	5

Cost per ton, 28s. 9d.
Price paid at present, 47s. 6d. + 1s. 8d. = 49s. 2d.

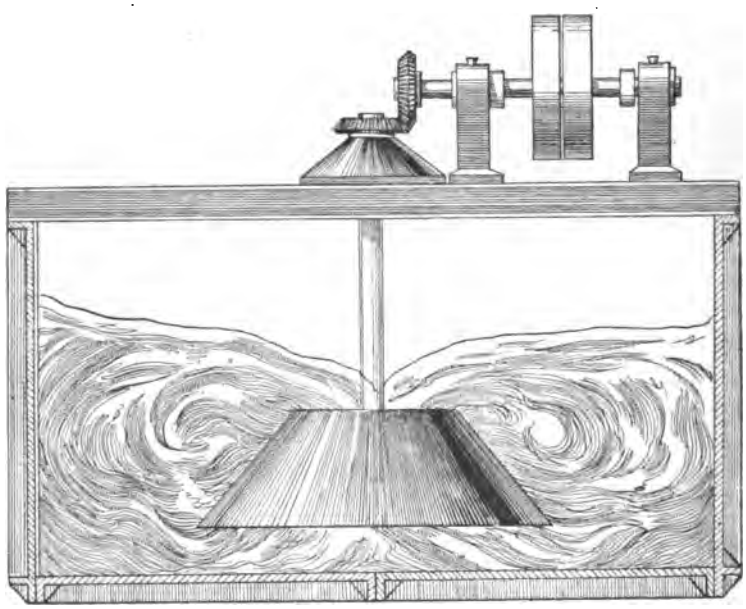

FIG. 4.—The 'Rapid' Precipitant Mixer.

The methods of mixing precipitants with crude liquors may be dealt with under the heads of—

(1) Mechanical stirrers or agitators, revolving and driven.
(2) Mixing by means of aeration.
(3) Cages and baffles.

Of the various forms of agitators, figs. 4, 5, 6 and 7 represent average

forms and require but little explanation. Where the precipitants are not easily soluble, and are heavy, these forms are preferable.

In the cases of figs. 5, 6 and 7, the author has found in practice that they are made invariably with the bottom seat or cup, into which the centre

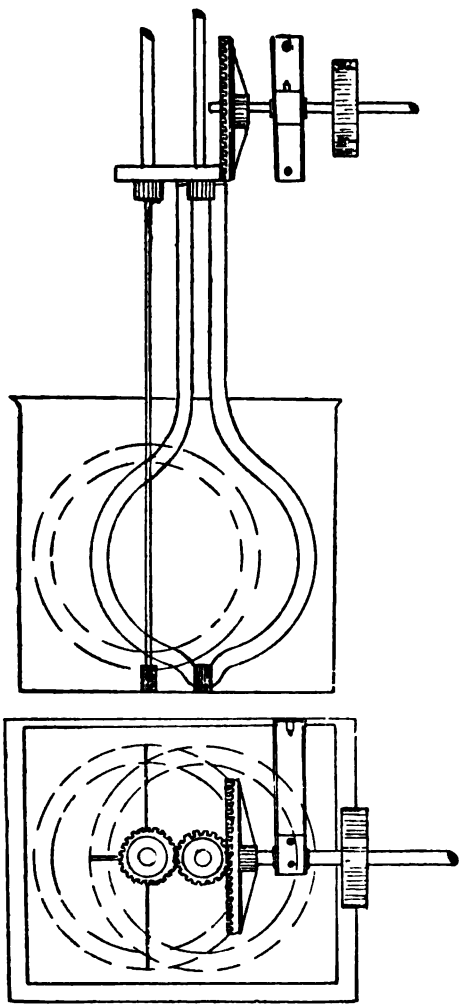

FIG. 5.—Common Agitator.

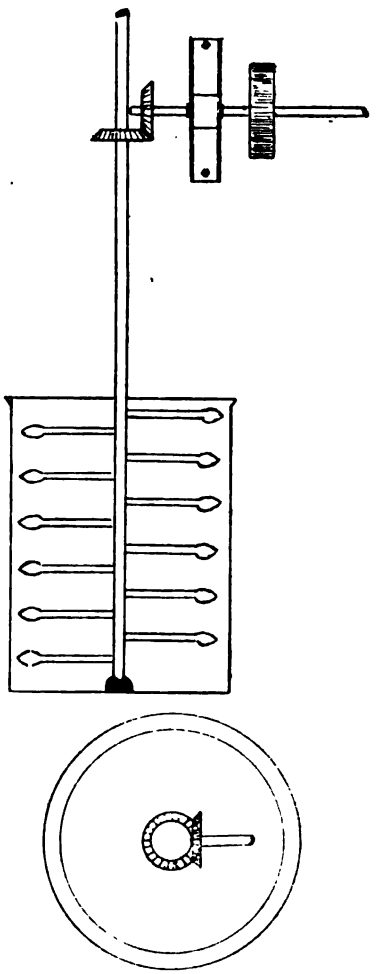

FIG. 6.—The 'Whisk' Precipitant Mixer.

axis bears, much too near the bottom of the mixer. A few inches of sediment, which nearly always is of a heavy gritty nature (the lighter particles being borne forward by the current), causes unnecessary friction apart from the grinding effect which results in the dropping of the whole vertical shaft and less contact on the bevel wheels. The cup should be

placed at least twelve inches above the bottom of the mixer and protected by means of a conical shield, as in fig. 8, diagram 1, split and bolted up, the arrangements for taking up the wear of the brasses, slightly coned on top, being suitable to the weight and speed of the spindle.

The mixer illustrated in fig. 7 has the advantage of an automatic and variable feed when a dry powder is delivered into it.

Where the precipitants are light, but not easily soluble, a system of

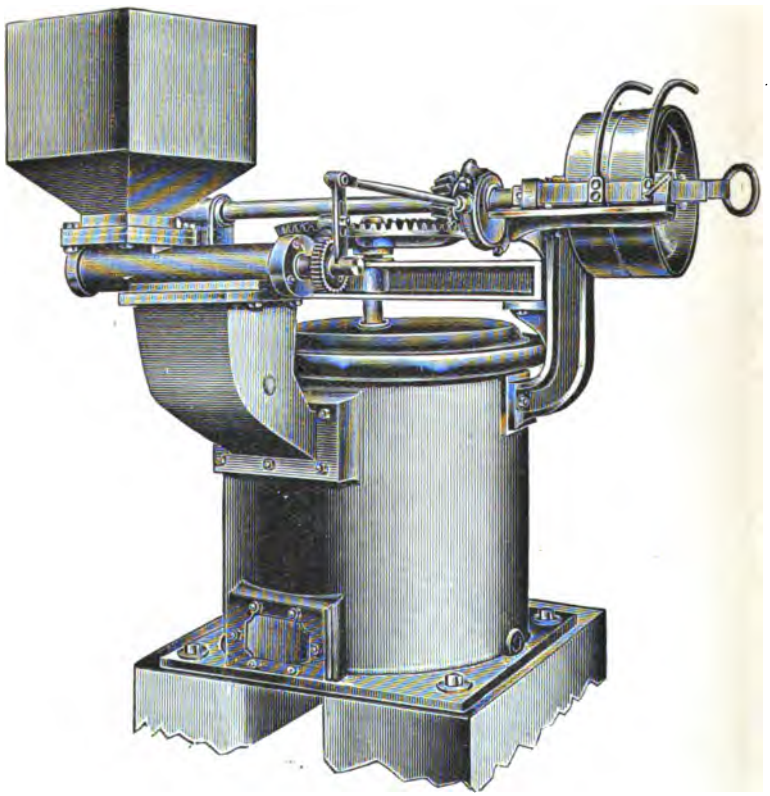

FIG. 7.—Wolstenholme's Lime Mixer.

mixing by aeration is often resorted to as described hereafter. But when the precipitant is readily soluble, as in the case of Spence's alumina ferric, and no lime is used in addition, a simple cage for the reception of the precipitant is sufficient if supplemented by baffle plates (fig. 9, diagram 1).

With the idea of reducing the quantity of precipitant required several devices have been adopted for taking advantage of the fact that continual agitation of light and fine particles in a liquid, more particularly on the application of heat, causes to some extent an aggregation of the smaller particles, as exemplified in the boiling of a fine precipitate of barium

PLATE I.]

The "Mather and Platt" System at Messrs Rylands & Sons, Chorley.
Messrs Lomax, Engineers, Bolton.

[*To face page* 24.

PLATE II.]

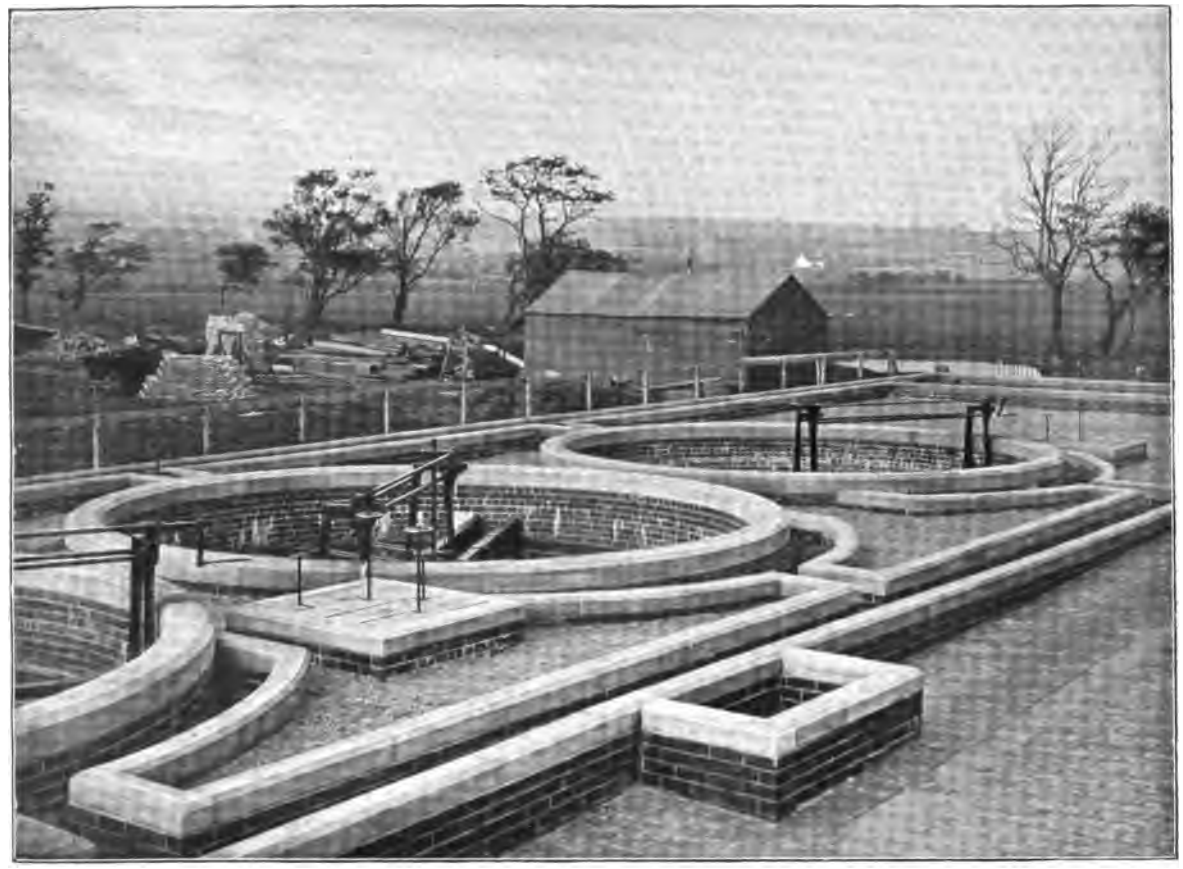

The Candy "Upward Flow" Tank, Barrowford.

[*To face page* 24.

DIAGRAM 2.

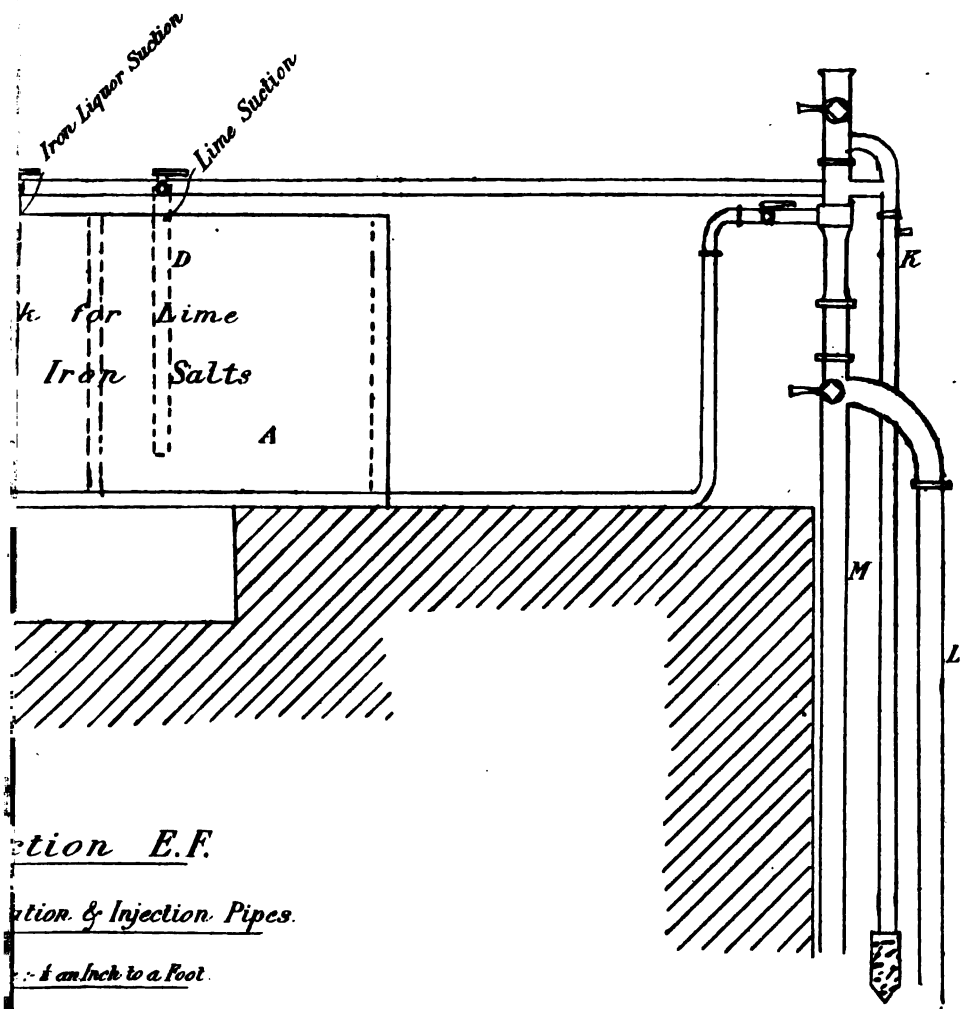

tion E.F.

ation & Injection Pipes.

:- 4 an Inch to a Foot.

[To face page 24.

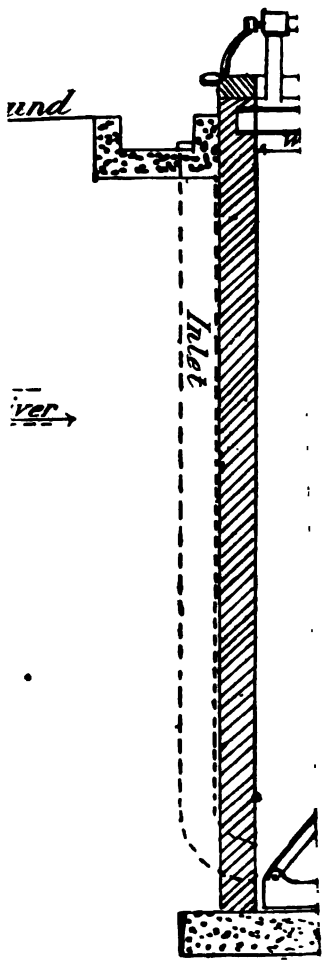
ound
Inlet
iver

sulphate or calcium oxalate. After such treatment settlement or filtration is brought about more readily. One of the most effective of these devices is that of Messrs Mather & Platt, which has been installed at Messrs Rylands & Co.'s Dye and Bleach Works, Chorley, and other places. A description of the process will be best understood from diagram 2, fig. 10, and Plate I.

The liquors for treatment are delivered into the tanks, on the bottoms of which are laid a series of perforated pipes, X. The perforations vary in size from one-sixteenth of an inch in proximity to the precipitant feed pipe Q, to one-eighth inch at the extremity. After the tank is filled a solution of precipitants is injected from the supply tanks A and B by means of the suction pipes C and D (section E F.). As soon as the precipitant has been discharged, the injection steam is turned into the pipe M, and induces a strong current of air which, entering the liquors under treatment through the perforations in the horizontal pipes, causes a very violent agitation, converting the contents of the tank, in fact, to a seething mass. This is continued some time, during which, no doubt, considerable aggregation of suspended particles takes place, and settlement is then permitted. The solution in the supply tank is made up by means of a small quantity of the liquors under treatment raised through the dilution pipe K by means of the injector also. A portion of the sludge only is removed from the tank each time after settlement, the remainder being left to assist the aggregation of incoming particles. The possibility of this old sludge becoming putrid and entering into solution, as well as general experience on the matter, is discussed in the chapter dealing with dye-works waste.

Another form of tank which claims to take advantage of this aggregation of particles is the Candy Upward-Flow Precipitation Tank, a plan and section of which appears on diagram 3, fig. 11, and Pl. II. The entrance for liquors under treatment, together with any precipitants added, is at the bottom of the tank, several inlet pipes running vertically down the outside of the circular tanks at points equidistant in the circumference. Liquids entering at the bottom pass away at the top and over sills in overflow carriers or troughs, the heaviest particles being carried upwards for the shortest distance, and the lightest of course for the greatest distance. Some of the lighter particles in their upward movements are entrapped by the heavier falling particles and so brought to the bottom of the tank. If the entrant elbows of the inlet pipes be turned in the direction of a semi-tangent to the circuit of the tank, it will be found that a slight rotary motion is given to the contents of the tank, which assists the massing together of the suspended particles. The abstraction of the sludge is dealt with hereafter.

A settlement tank has recently been introduced into paper mills, known as Fulner's Patent Stuff Catcher, the operations in which are very similar

to those in the Candy Upward-Flow Tank. In this case the liquors for treatment enter the circular tank in a downward direction between the tank shell A and an annular baffle plate B, seen in the elevation, fig. 12, diagram 4, as a truncated cone. A considerable quantity of the suspended solids, in this case from the back water, is deposited at once in the cone of the tank and is delivered, owing to the hydrostatic head, at the point C. The somewhat lighter particles will stand midway in the tank and intercept the lightest, which would otherwise pass away with the overflow or clear water at E.

Hans Benedikt* contends that in effluents which are capable of self-clarification, the downward velocity of the particles suspended must be at least two millimetres per minute. In the same valuable contribution to the subject of Trades Waste it is stated:—"If it be desired to perfectly clarify, by deposition, on the upward continuous flow principle, water which is naturally charged with suspended matter, or by the addition of precipitants, a transverse section of more than $\frac{1}{0 \cdot 002} \times 60 = 8 \cdot 33$ square metres is required to obtain one cubic metre per hour of clear water, in order that the upward velocity of the current may be less than the downward velocity of the particle.

"Let us assume that such a proportion be applied to a vessel (fig. 13, diagram 4). The entrance is at *a* and the outlet at *b*; if the velocity of the upward current is less than that of the falling particle, clear water emerges at *b* continually, the mud remaining in the vessel. It is seen, thus, that the quantity of water clarified depends upon the transverse section only (horizontal profile), however high the vessel is. Accordingly nothing would be gained by increasing the height after a certain point, because though the upmost strata clarify themselves, the falling particles have to pass through the lower strata. If, on the other hand, we insert in this vessel a number of (say eleven) horizontal plates, equidistant, so that each of the divisions forms a vessel in itself (fig. 14, diagram 4), it is obvious that each of the divisions can clarify just the same quantity of water as the large vessel itself, always assuming the same velocity in the upward current. But as it is impossible so to introduce the liquor into each separate chamber that it will rise uniformly across the whole area, and as, moreover, it is impossible to remove the deposited mud from the horizontal plates, it is necessary to arrange the plates obliquely (fig. 15, diagram 4), and to allow the water to flow through the chambers and out at the side. The most serviceable mode is that with the plates placed as in fig. 16. It is not necessary for the water to rise perpendicularly in each division, nor does it matter how quickly it streams out at the top of the main delivery pipe, so long as it has had the required time to pass through the division, as shown necessary in fig. 15, the graphic representation.

* *Die Abwasser der Fabriker.*

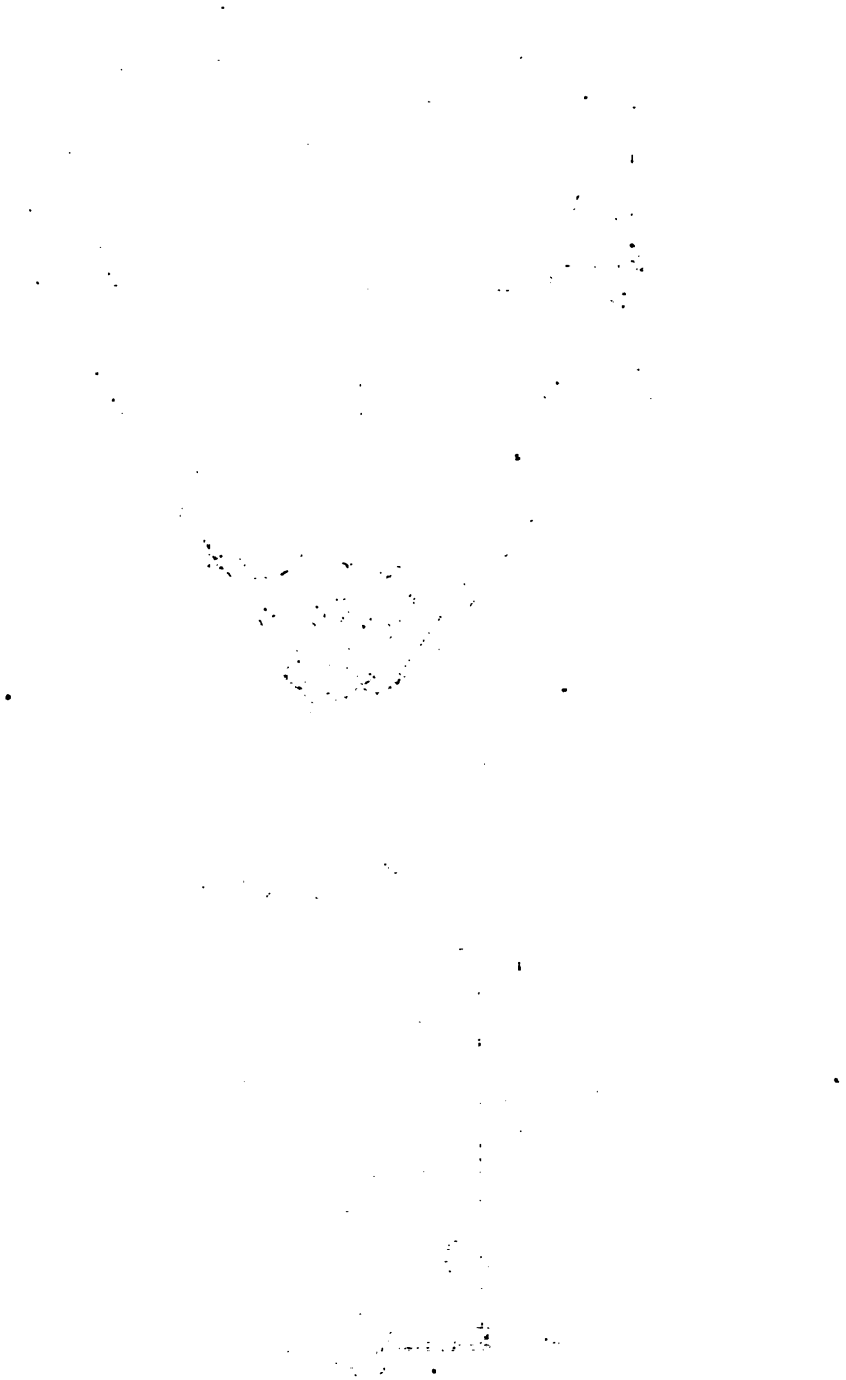

DIAGRAM 2.

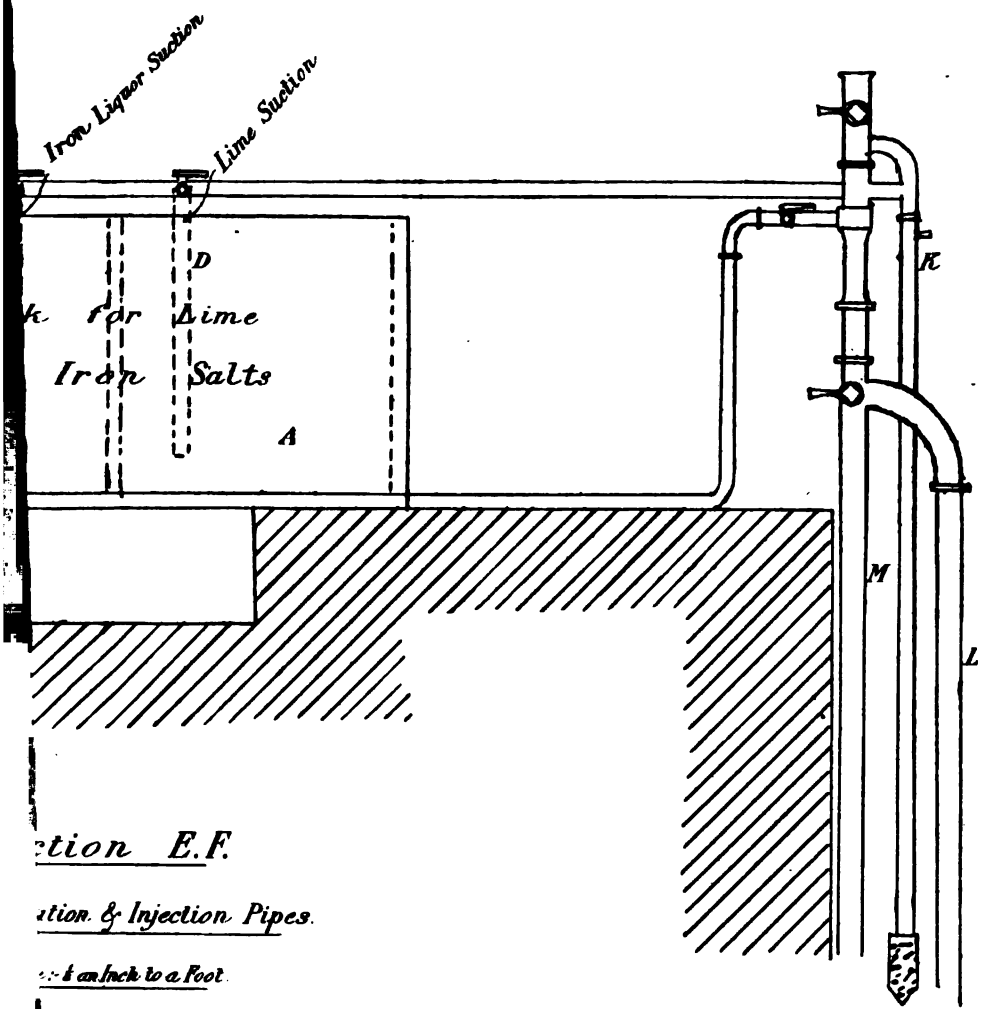

ction E.F.

ation & Injection Pipes.

Inch to a Foot.

[To face page 24.

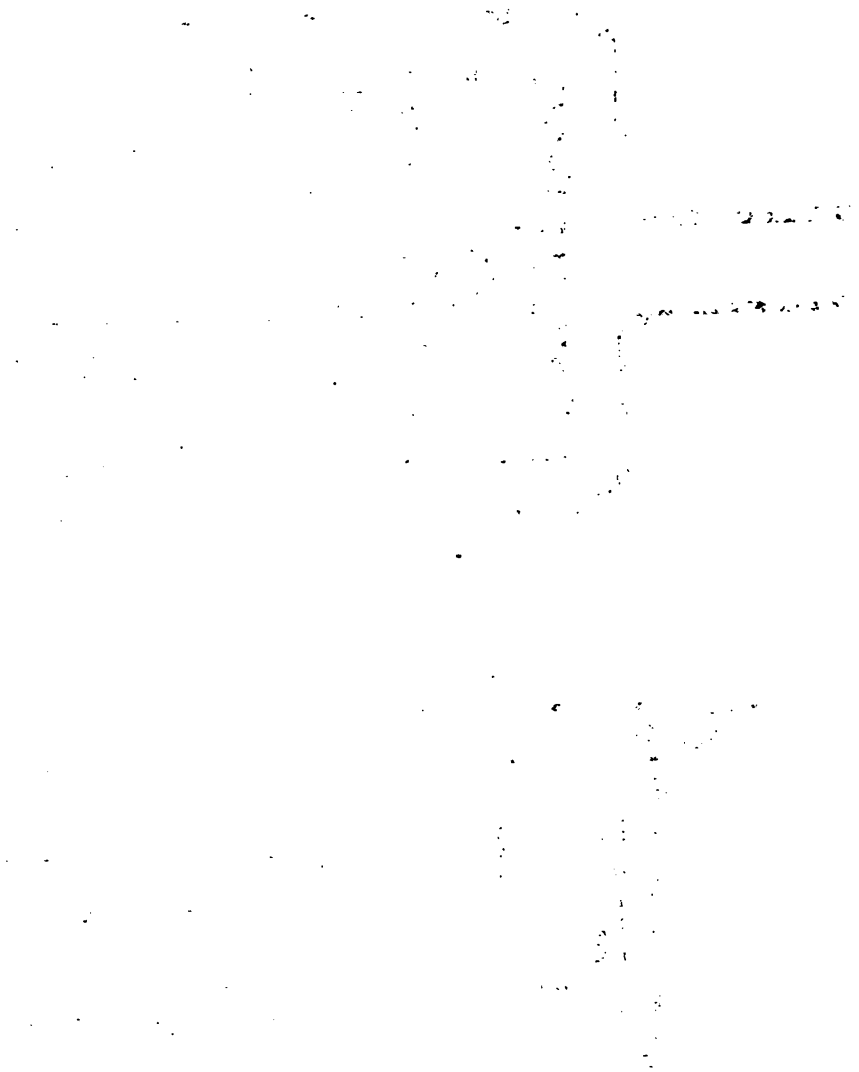

If the rate of fall of the particle be V^1,
Velocity of current V^2,

then the path of the particle must follow the resultant S, and finally deposit itself on the surface of the plate. The velocity of the current increases towards the middle, so that the surface of the mud forms itself according to the curve *c d*. Beyond this curve the water will be clear. It follows from the foregoing that the efficiency of a settling tank can be

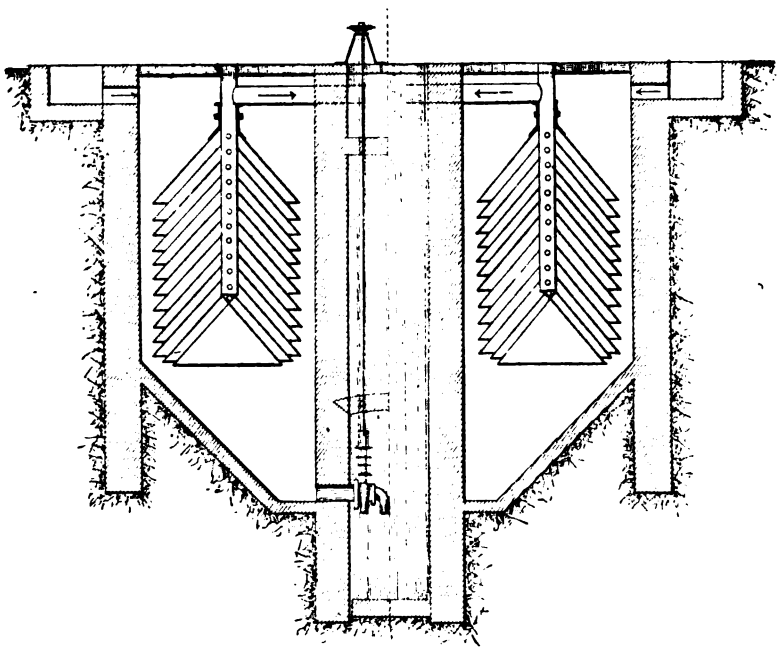

FIG. 16.—Section of Subdivided Precipitation Tank.

increased by these means 15 to 25 fold." The plan and section of a series appear in figs. 17 and 18, diagram 5.

The above very lucid description of the principles involved in the sedimentation or settlement of particles suspended in water, though only strictly correct for a liquid containing particles of fairly uniform character, shows nevertheless the main objects to be borne in mind in deciding upon the dimensions and form of a settlement plant. Where the particles vary greatly in character, the object should be first to render them similar and then to provide a tank of such form and dimension as will place the current velocity in fair proportion to the 'sinking speed' of the particle. How often is this done? Speaking generally, the last thing to influence matters is the *depth* of the tanks; yet on one occasion the author had the plans of certain precipitation

tanks included in a sewerage scheme returned by the Local Government Board in order that the depth of the precipitation tanks might be increased to five feet, and this where the increased depth meant an equivalent increase of lift for the pumps, and where the subsoil was soft peat to a considerable depth not capable of standing heavy weights. The tanks were completed eventually by another engineer at the increased depth, and after completion split from end to end, due to the instability of the underlying peat.

The Construction of Precipitation Tanks.

When the holding capacity, and the *form*—that is, the relations between length, width, and depth—have been settled, the actual construction of plant becomes a matter of importance. By far the commonest defect is weakness. Of the many hundreds of purification works which have been put into operation by manufacturers few indeed are of a substantial character. The reasons are manifold. Primarily the trader sees no return for the costs incurred, and therefore desires to keep these as low as possible; indeed, it can hardly be expected that anything but the minimum will be expended on compulsory works. In other cases the works to be executed are decided upon by a Board of Directors, whose only aim and object is immediate dividend, and whose interest in the share market for the moment is greater than in the condition of purification plant fifteen years hence. For it is often contended that the administration of the Rivers Pollution Act may be modified in the future, and since its administration is purely a local matter, this contention generally carries weight. The result is in many cases 'jerry' work, which in the long run is much more expensive than sound work. It is a most difficult matter to persuade the average millowner to build a tank wall more than eighteen inches thick. He sees the mill wall this thickness carrying heavy girders bearing machinery weighing tons, but forgets the pressure is mostly perpendicular and downward, with little side thrust, and that little generally applied at a point easily supported. With hydrostatic pressures the following is the safest method of deciding on the strength of a tank wall *:—

A wall for retaining water is subject to two external forces, its own weight and the water pressure. The water pressure is proportional to the depth and at right angles to the surface. Taking the case of the wall A B, fig. 19, the pressure at B due to depth is proportional of course to the depth, and may be represented by a line equal to A B drawn horizontally B D. The variation or reduction in pressure up the wall is then graphically represented by the triangle B D A, running out at A. The triangle, too, represents the total pressure, and its centre of gravity E, one third from the base, will have the resultant P passing through it.

* Rivington, vol. iii. 233.

Taking a running length of the wall one foot, the resultant pressure is the weight of a prism of water whose cross section is the triangle A B D, and the length one foot. The area of a triangle is half the height into the base, or $\frac{AB.BD}{2}$

but AB = BD, so $\frac{AB^2}{2}$ or $\frac{H^2}{2}$ = contents of prism in cubic feet, for running foot of wall,

and $\frac{H^2}{2} \times \cdot 557$ = weight in cwts. of the water prism.

Suppose the wall were that of a tank 6 feet in height. In the case of a wall for retaining water, the resultant of the two forces, wall weight downwards and pressure horizontally through centre of gravity of triangle, must not approach the outer edge of the wall nearer than one-third the width of the joint. In the case cited the pressure downwards of the wall may be

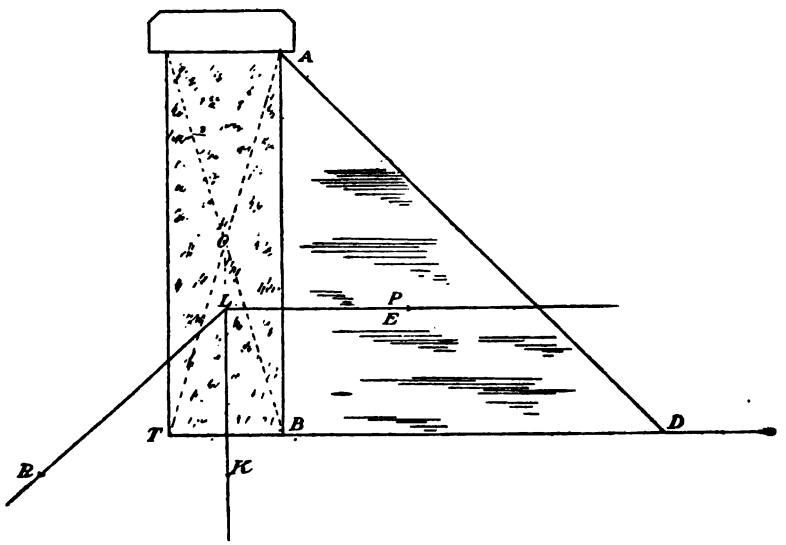

FIG. 19.

represented by the force K passing through O, the centre of gravity of the wall. Taking the weight of 1 cubic foot of brickwork at 1 cwt., the weight of 1 foot length of the wall 18 inches thick will be for a height of 6 feet, $6 \times 1 \cdot 5 = 9$ cwt.

The weight of the prism of water, $\frac{6^2}{2} \times \cdot 557$ = say 10 cwt.

These two forces are represented by lines L P and L K, and the resultant by L R, which falls right outside the joint T B, and the wall must fall. To

be permanently stable it would have to be built as per fig. 20. Here the forces, proportionately 10 and 16 for water and wall weight, are represented by L P, one-third from base and L K passing through centre of gravity O, and the resultant L R is 1·8 feet from outer edge of wall T Q, more than one-third of the thickness, 5 feet.

By sloping the joint as at T B, fig. 20, the centre of gravity of the wall and force L K are brought proportionately nearer the inside edge.

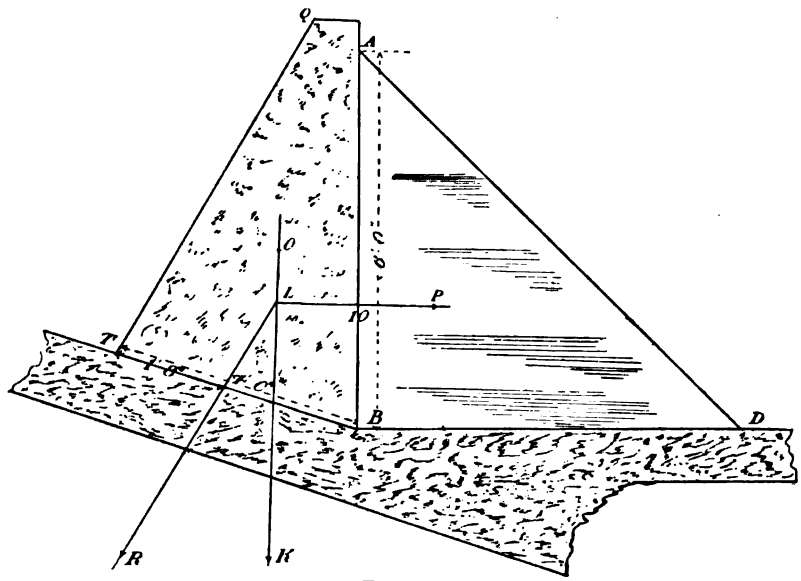

FIG. 20.

A practical rule for thickness of walls to retain water is—

Width at bottom = height × 0·7
Width at middle = height × 0·5
Width at top = height × 0·3

Where the walls are built of masonry the joints should be made throughout with cement mortar, two to one. Rubble work faced with 4½-inch brickwork even well laid in good cement cannot be relied upon. Brickwork throughout, except in an absolutely 'stone' district, appears to be the most convenient method, as bricks lend themselves more readily for the formation of channels, valve fittings, and for special facing. The best facing is a vitreous blue brick, and for watertight work every alternate course of bricks should be grouted. Except where the work is circular, English bond should be adopted and no distinction made between work above or below ground, as, where percolation has once commenced, outlet channels are formed eventually even in clay, or inlet channels where the ground is waterlogged.

The floors of all tanks should undoubtedly be laid with at least 9 inches of good concrete, after the shell walls have been completed. Manufacturers are so accustomed to using 'lodges,' or supply reservoirs with earth bottoms, that great difficulty is experienced always in getting a hard permanent floor to the tanks. The constant emptying and filling, and cleansing of sludge demands this. Sometimes, when it becomes apparent that a few inches of the tank bottom is missing, a layer of 3-inch brickwork or brick on edge is put down, but this soon becomes 'rocky,' the bricks taking new positions, and in the end a concrete floor is laid after a lot of waste labour and injury to the tank walls.

The following specification for materials as they should be supplied and used will serve as a guide, it being almost universal in municipal work, though it is doubtful whether more than a small percentage of manufacturers could be persuaded to follow it on the ground of cost:—

All bricks to be sound, hard, and well burnt, uniform of size and shape, sharp in the 'arrises,' and to be free from cracks, flaws, and imperfections, and to be the best of their respective qualities. All bricks for circular work to be made to required radii. All foundations and filling to walls to be best common bricks. The bricks before being used to be saturated with clean water, to be properly bonded, bedded, and jointed, and flushed with mortar. No joint to exceed three-sixteenths inch in thickness, to be neatly pointed as the work proceeds, the arches to be carefully keyed, and where more than 4½ inches in thickness, to be laid in concentric rings.

Except where otherwise mentioned in the quantities the whole of the brickwork to be built in cement mortar. No difference to be made between outside and inside work. No bats to be allowed except as closers. All exposed faces and surfaces to be neatly pointed and ruled. All walls to be carried up uniformly, no part to be five feet higher than the rest. All to be plumb and straight.

All arches to be gauged and neatly cut to radii, with close joints, properly cut skewbacks, and to be set and pointed in fine cement.

The cement to be used in the works shall be 'best Portland cement,' from such manufactory as shall be approved and sanctioned by the engineer, ground extremely fine, so that with a sieve having 1600 holes to the square inch there shall be no residue, and that with a sieve having 2500 holes to the square inch the residue shall not exceed 10 per cent. by weight. It shall not weigh less than 112 lbs. to the striked bushel after falling in a steady stream from a hopper placed 6 inches above the measure, and shall be of such quality that, when mixed in the proportion of three of sand to one of cement, it shall bear a tensile strain of 150 lbs. per square inch after being exposed to the air for two days and placed under water for twenty-six days; and shall also be capable of bearing on the average a tensile strain of not less than 400 lbs. per square inch for neat cement made into briquettes by hand pressure only and after being exposed to the air for one day and placed under water for six days. The cement shall, for a period of fourteen days before being used, be spread in a layer of about six inches in thickness on a dry boarded floor under cover, and be then turned over daily to cool. The strength of the cement supplied shall be ascertained by tests to be made from time to time, reasonably, and as frequently as shall be required by the engineer or his deputy.

The contractor to provide a covered shed or sheds sufficiently large for the storage of all lime and cement, and for the regular spreading and testing thereof.

The contractor also to provide covered sheds and clean boarded floor and mixing pans for the gauging and mixing of all lime and cement, mortar or concrete.

All concrete ordered to be used to be mixed by measure in the following proportions, viz. : one measure of cement, one measure of washed sand, and five of broken stones, to 2-inch gauge, clean washed gravel, or an approved aggregate washed and thoroughly clean. The whole to be turned over twice while dry on a wooden platform, and after being mixed with a sufficient quantity of clean water (supplied by means of a rose) must be turned over twice more and placed where required and rammed.

The surface of floors of tanks to have the top two inches composed of finer concrete with only two parts of broken stone to ½-inch gauge and one part of sand, the same being put on immediately after the bottom portion and before the latter has begun to set.

It shall be rammed solid and made perfectly true and even to the shapes shown in the drawings, and the surface of the fine concrete shall be worked up as soon as laid to a smooth face with a wood float.

When a new bed of concrete is laid on or adjoining other concrete that has become hard and dry, the surface and point of junction thereof must be roughed, cleaned, and well watered before the new concrete is laid, and every care taken to effect a thorough junction of the mass.

The cement mortar to be mixed by measure in the proportions of one part of cement to two parts of clean washed sharp sand ; the cement to be mixed up only as it is required to be used.

The following are five examples of typical collapses of tank walls which came under the author's notice between the years 1893 and 1898 :—

I. *Darwen.*

Tanks completely out of the ground. The walls, per section in fig. 21,

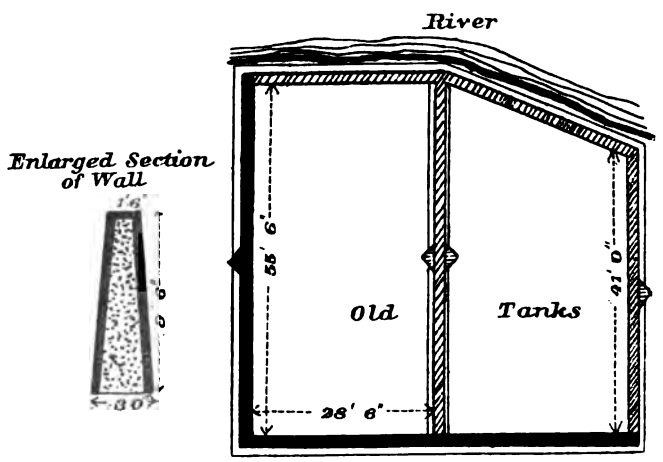

FIG. 21.—Paper Mill Precipitation Tanks as first built.
Scale 30 feet to an inch.

were built with a concrete core faced with 4½-inch brickwork. The shaded portion collapsed, the middle wall going bodily first and taking the others

PLATE III.]

Paper Mill at Darwen. Collapsed Walls in Precipitation Tanks.

[*To face page* 32.

PLATE IV.]

Paper Mill at Darwen. Tanks as rebuilt.

[*To face page* 32.

with it, as shown in Plate III. Fig. 22 shows how they were rebuilt. The walls were made 4 feet at the bottom, and 4½ feet at the top with more

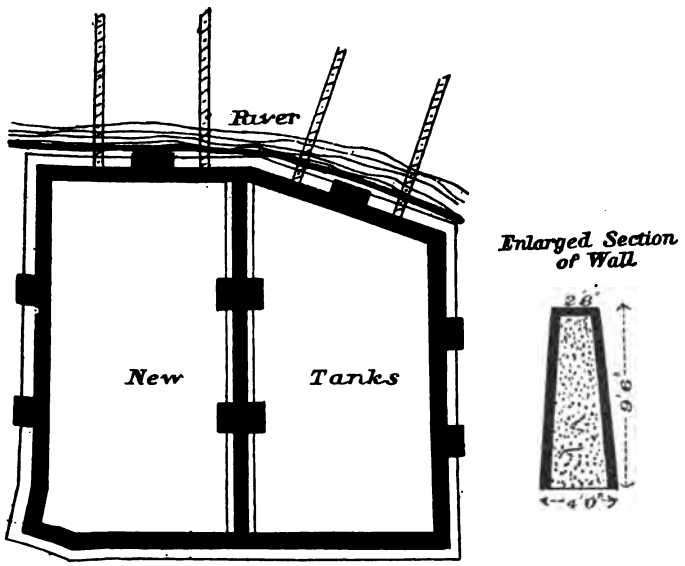

FIG. 22.—Paper Mill Precipitation Tanks as rebuilt.
Scale 30 feet to an inch.

headers in the facing, better concrete and buttressed as shown. Except on

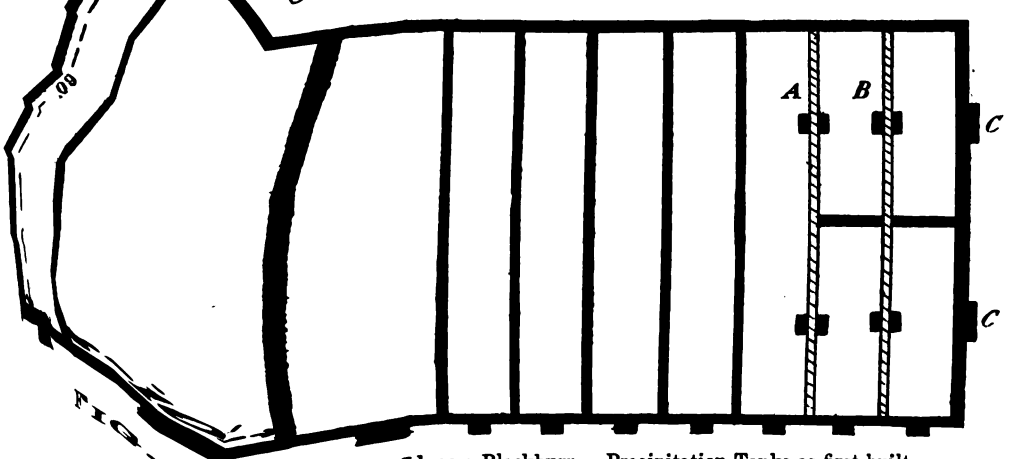

FIG. 23.—Mill near Blackburn. Precipitation Tanks as first built.
Scale 30 feet to an inch.

the river side the walls are banked up with earth, and that along the river is shored up with baulks (Plate IV.). Though not even now theoretically

safe, the rebuilding shows that the lesson of the collapse had been taken to heart much more than in the cases to follow.

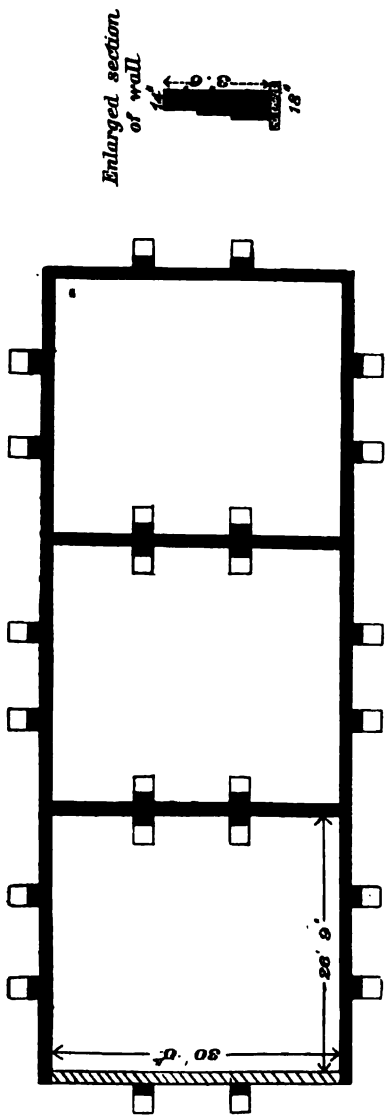

FIG. 24.—Paper Mill near Accrington. Plan of Precipitation Tanks. Scale 20 feet to an inch.

II. *Blackburn.*

In fig. 23 the tanks shown were completely above ground. They were built 6 feet high with 18 inches plain boundary and cross walls which soon began to weep. Shortly after, in fact almost immediately on being put into operation, the two cross walls A B fell down. These were rebuilt with further arched strutt walls 18 inches thick and the shell walls buttressed as at C, shown in plate. By these means, wall plates, shoring, and continual pointing, the tanks are held together, but the whole job can only be characterised as stupid, for the whole of the tanks can never be run down together while the mill is working, as no single cross wall can safely withstand the pressure of water 6 feet deep.

III. *Accrington.*

Tanks completely above ground. Fig. 24 shows plan of tanks and section of walls, built in the first instance *without* buttresses. The portion shaded fell immediately the tanks were filled, after which it was rebuilt and the walls buttressed as shown.

IV. *Burnley.*

Tanks were built 5 feet out of the ground, 9-inch walls, as per fig. 25. The portions shaded collapsed and the whole tanks were rebuilt, 18-inch walls with buttresses and tie rods (fig. 26).

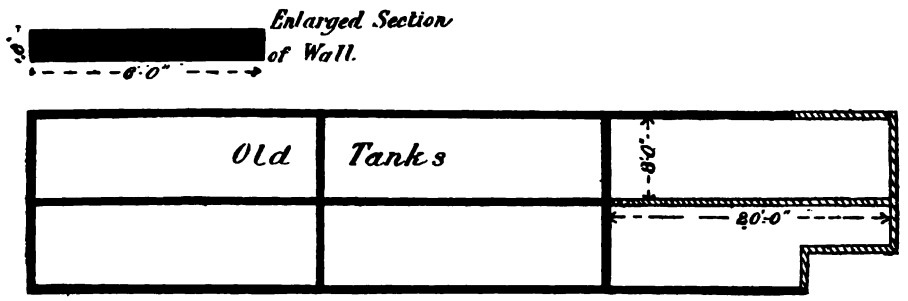

FIG. 25.—Tanks as first built at Paper Mill near Burnley.

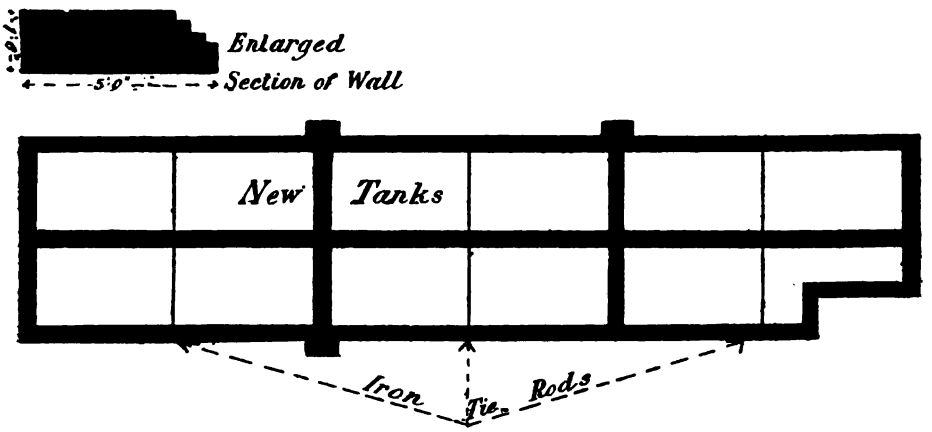

FIG. 26.—Paper Mill near Burnley. Tanks as rebuilt.
Scale 20 feet to an inch.

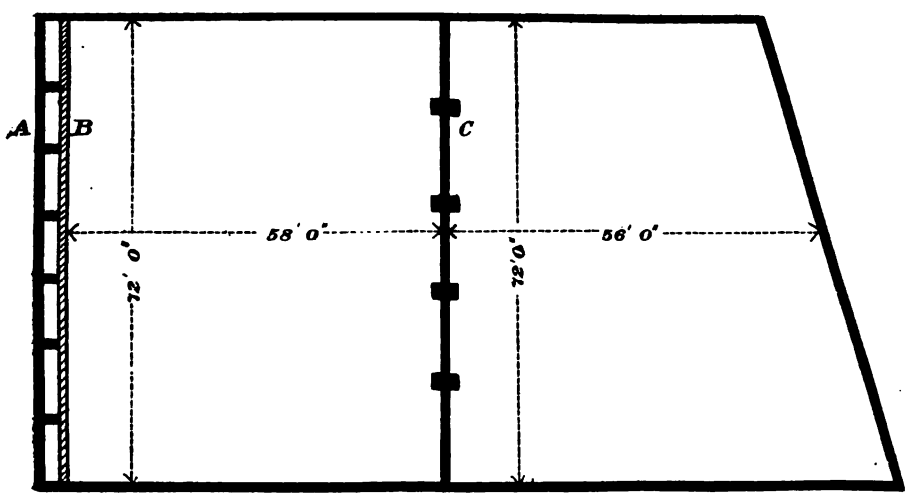

FIG. 27.—Bleach Works near Horwich. Plan of Precipitation Tanks.
Scale 30 feet to an inch.

V. *Horwich Vale.*

Fig. 27. The tanks were below ground with 14-inch brickwork, 3 feet deep. The wall B collapsed, after which it was rebuilt, again 14-inch brickwork but with supporting arches of 14-inch work, and the cross wall C strengthened by buttresses.

Sludge Abstraction and Disposal.

The deposited solids in precipitation or sedimentation tanks are probably the source of more trouble and expense than the collection of waste liquids, including the pumping thereof, for after all, where liquids are used in any quantity, pumps are found in almost every corner, and their management and maintenance is well understood.

For the purpose of removing the sludge, the supernatant liquor is usually run off by means of a float, or arm, as shown in figs. 28 and 29, diagram 6, or by means of a 'clough' or series of superimposed valves. When the top liquor has been run off, or pumped off in the cases of low level tanks, the sludge rarely contains more than 7 or 8 per cent. dry solids, though when tanks are run on the continuous flow system, the first of the series will generally contain the heavier particles and the sludge will be therefore less slimy and drier. Ninety per cent. of water, however, is as little as it generally holds.

Notwithstanding the large percentage of water, and the apparent mobility, a small portion only will gravitate with a less fall in the tank floor than one in fifteen. Few tanks are made with such a quick fall as this in the floors, owing to seeming waste of settling space at the shallow end; but few tanks indeed are found but what call for a considerable amount of assistance by means of 'pushers' when the sludge has to be removed.

Many expedients have been adopted to obviate the necessity of taking off the supernatant liquor at all. Probably every caretaker at some time or other has opened the bottom sludge valve in busy times in the hope that the sludge, being nearest to it, would 'walk' out first. The first attempt to entice the less mobile to leave the more mobile, or, more correctly, to prevent the exit of the more mobile, was that of the Dortmund Tank with a conical bottom.

This was followed by the 'Ives' tank (fig. 30, diagram 6). A is the outer casing of metal or brickwork, terminating at the bottom in a cone B, having a sump C into which the sludge D settles. The top of the tank is covered except for the inlet E, manholes F, and effluent outlets G and G'. The crude liquor enters the tank through inlets H in its top or cover, and passes down between the divisions L or Q, and then up one of the inner chambers O or P, taking the courses as indicated by the arrows, and over the upper edge of the inner chamber into the trough J, thence to the

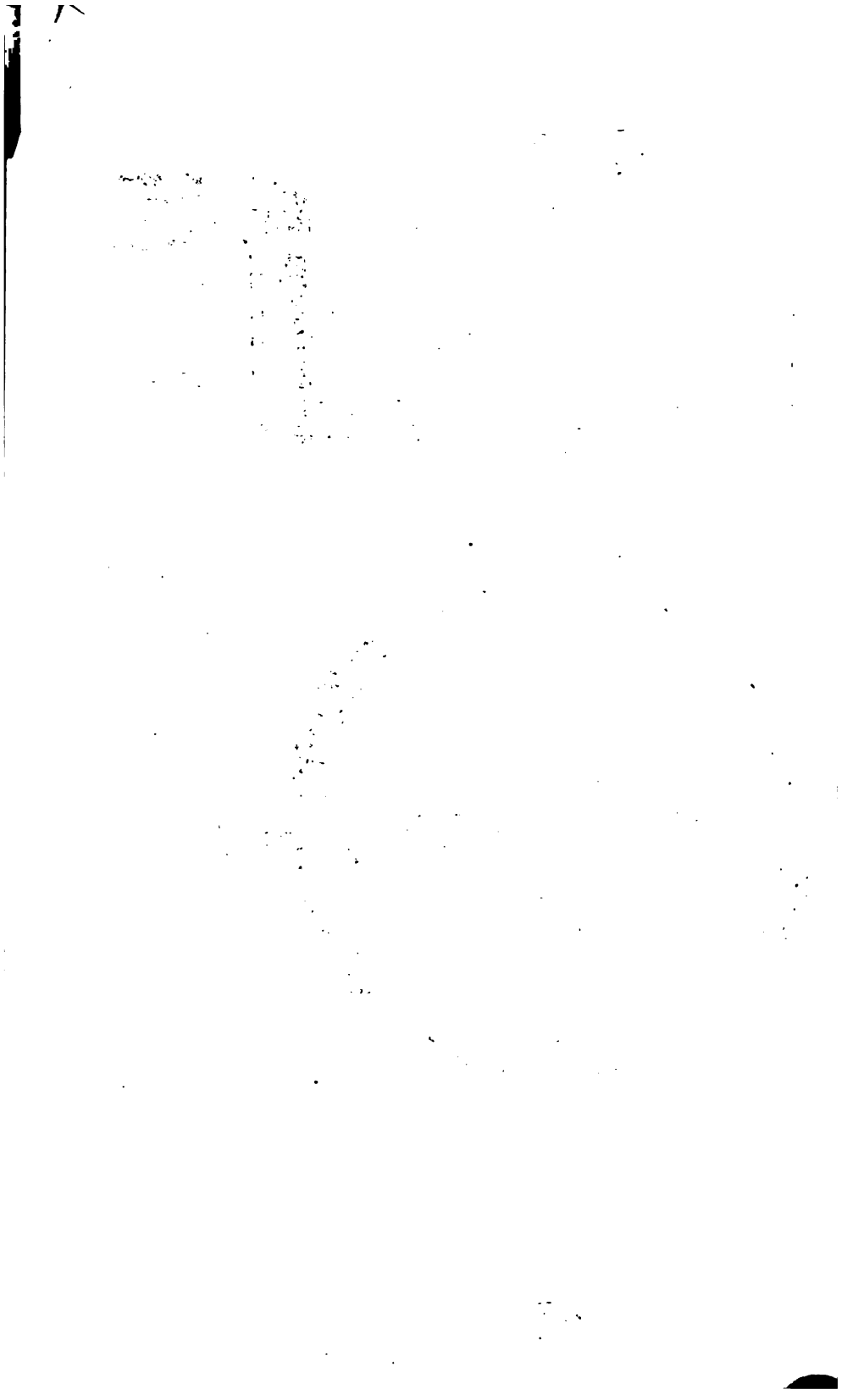

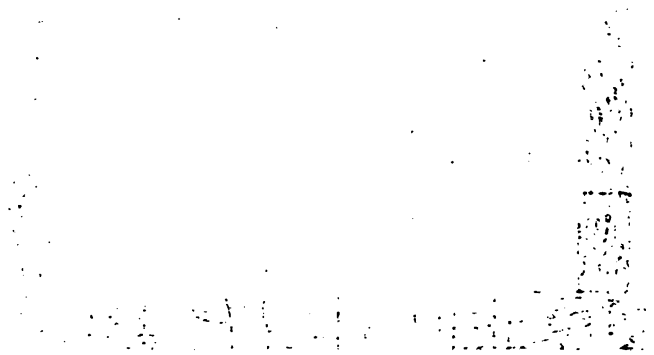

outlets G. The sludge is withdrawn by the pipe N attached to a pump while the tank is in usual work.

The objection to the necessity for a pump in this tank led to the 'Candy' upward flow tank (illustrated in fig. 11, diagram 3) which is supplied with a perforated pipe lying on the perfectly horizontal floor, for the purpose of siphoning the sludge through a pipe running under and up the tank externally to a point about 2 feet below the water line.

Naturally if left stationary the perforated pipe would draw first the sludge lying immediately contiguous to the perforations, and then the water. But to avoid this the pipe is slowly caused to make a complete sweep of the tank by means of the winch and bevel wheels attached, and a tight swivel joint at the centre.

The only objection to both the 'Ives' and 'Candy' tanks is that the sludge delivered is thin; this objection, however, is often not so great as that of pumping, where the supernatant liquor cannot be drawn off without it. The perforations are apt to become clogged where very efficient screening is not resorted to, and to meet this the 'Fidler' apparatus dispenses with the pipe and substitutes a helical scraper which delivers into a central sump (fig. 31, diagram 6) over which is suspended a plunger. Where this is used extra expense is involved in protecting the top of the tank, otherwise any adventitious brickbats, etc., are directly propelled into the sludge delivery tank and choke it. This arrangement is applied in the tanks at Farington shown in Plate VIII.

Where, owing to bad ground, the disturbing of foundations, or for any other reason, it is found inadvisable to construct a deep upward flow tank, but where it is necessary to abstract the sludge without drawing off the top liquor, a modification of the Candy principle can be applied to a horizontal tank. Referring to fig. 32, diagram 7, the crude liquors enter the tank at E, and under the baffle wall C. The floor of the tank is formed into V-shaped grooves g, fig. 32, and these feed the main sludge receptacle b, fig. 32. This is practically the cone of the 'Ives' tank, except that the delivery pipe is a siphon with its outlet under the water line, and is made either stationary or movable transversely.

Whatever eventually becomes of the sludge it is advisable to press from it mechanically as much water as possible, as the cost of carting or pumping alone justifies this in most cases. Makers of all sludge presses rely on intercepting the actual solids in the sludge by means of a cloth—either a woollen felt or sack-cloth. The simplest form of press would be of course an arrangement similar to that in fig. 33, diagram 7, where A represents a receptacle for sludge, B the intercepting cloth, and C the point of application of pressure. The cloth would need much support at the points D, but instead of supporting strips a corrugated plate is used, and the whole placed

vertically as in fig. 34, diagram 7. The plates G are provided with corrugations or projections D running vertically, on which the bags B rest, the water running down between the projections (shaded), and to the outlets F through a bore at the bottom of the corrugations, the solids in the form of a 'cake' being retained within the space A until the plates are pulled asunder.

Any number of these plates are built up to form one continuous press, fig. 35. For many forms of sludge the pressure applied at C may be through the sludge itself as delivered by a single or preferably double acting ram pump, such material, for instance, as wood pulp, paper mill backwater solids, brewers' or distillers' yeast; but where the material is slimy and liable to completely or almost completely choke the bags or corrugations in the plates

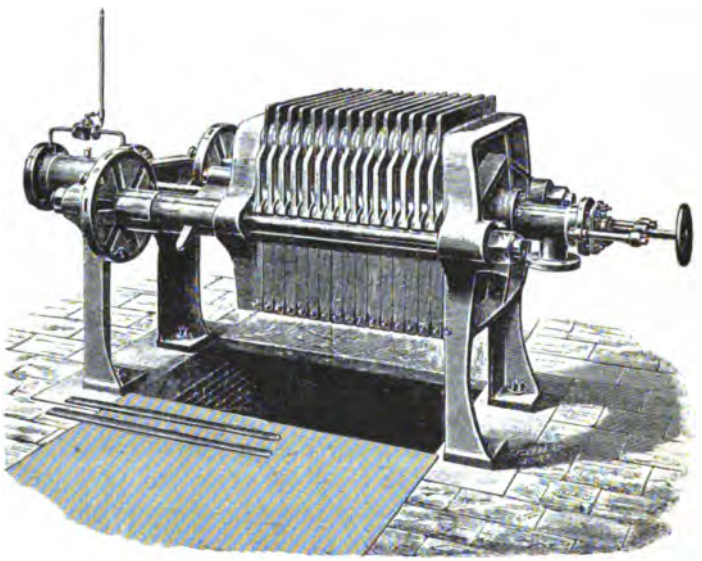

FIG. 35.—Sludge Press.

behind the bags, a relief valve on the point C (fig. 34, diagram 7) permits the whole of the charge to return as delivered and real pressing operations cease.

In such cases a greater and constantly sustained pressure can be applied by means of compressed air. Then the material is first delivered into a sludge tank A, fig. 36, for mixing with lime, which assists the expression of the water, and from thence into the forcing receiver or ram B on to the surface of the sludge in which the air is applied. This drives up the sludge through a dip pipe to the point C at the near end of the press, and keeps it charged.

If desired, lime may be added in the ram, and by means of an air ejector the sludge may be driven into the sludge tank A from a lower level C if necessary.

DIAGRAM 7.

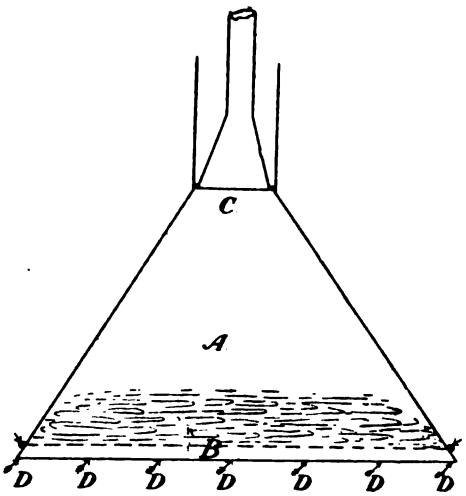

FIG. 33.

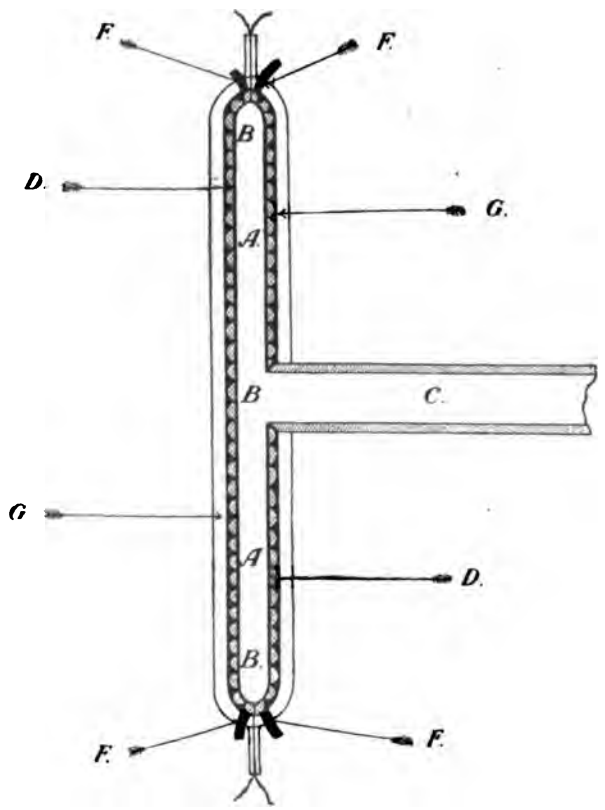

FIG. 34.—Sectional plan showing end pair of press plates.

[*To face page* 38.

An arrangement of this description is at work at the Burnley Paper Company's Mill, at the Cheddar Paper Mill, and a direct acting instalment at the Darwen Paper Company's Mill, Spring Vale, and Messrs Potter's Hollins Mill, Darwen. At the two latter places it has been found beneficial to blow a jet of steam into the sludge tank before pressing, this being an expedient well known to paper makers for 'opening the fibre.' Plate V. shows an installation of sludge presses at the Blackburn Sewage Works.

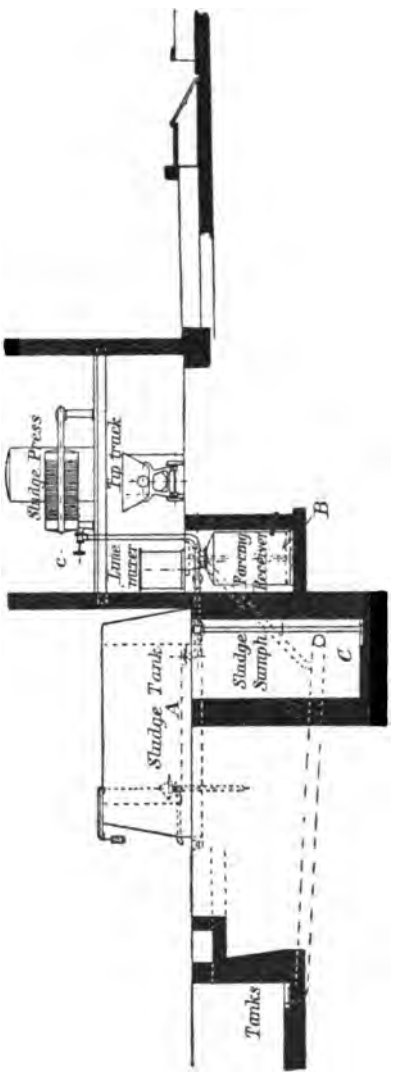

FIG. 36.—Arrangement of Sludge Reception Tanks with relation to Sludge Press. Messrs Johnson's.

Apart from the extra expense involved in the compression of air, which will be considered hereafter, considerable losses of air are incurred in discharging the rams of air after the sludge has been propelled therefrom through the press. The rams are then of course completely filled with air at working pressure, which must be exhausted to admit of fresh sludge. The author put down at the Wolverhampton Sewage Works a capacious receiver A (figs. 37 and 37A, diagram 8), into which the rams C' were exhausted. This receiver has a capacity of about three times the rams, and retains therefore three-quarters of the exhaust air at one-fourth the pressure. In this case the pressure in the exhaust receiver is 25 lbs. and the supply is used to drive a small engine C working the pump D.

A slight difficulty was experienced at first owing to the freezing up of the exhaust and ports of the small ordinary steam engine used, due to the expansion of and consequent loss of heat by the compressed air, but this was easily overcome by passing the air feed pipe down the chimney of a small combustion stove, the extra heat thus absorbed being returned as increased pressure.

The Compression of Air.

Compressed air is used in the treatment of trades waste for various purposes—sludge pressing, agitating liquids, and often as power for lifting. The usual mode of compressing it is by means of the common double acting jacket cooled compressor shown in fig. 38, either steam or belt driven. In the figure it is belt driven, the piston A of air cylinder drawing inwards the suction sniff valves against adjustable springs, and so permitting an inrush of air while moving in one direction, but closing them when moving in the other and so compressing the air until sufficient pressure has been reached to raise the delivery valve E from its seat, and so allow the compressed air to pass along the delivery pipe and into the receiver D, which acts as a storage or reservoir from whence at the pressure obtained more or less may be drawn.

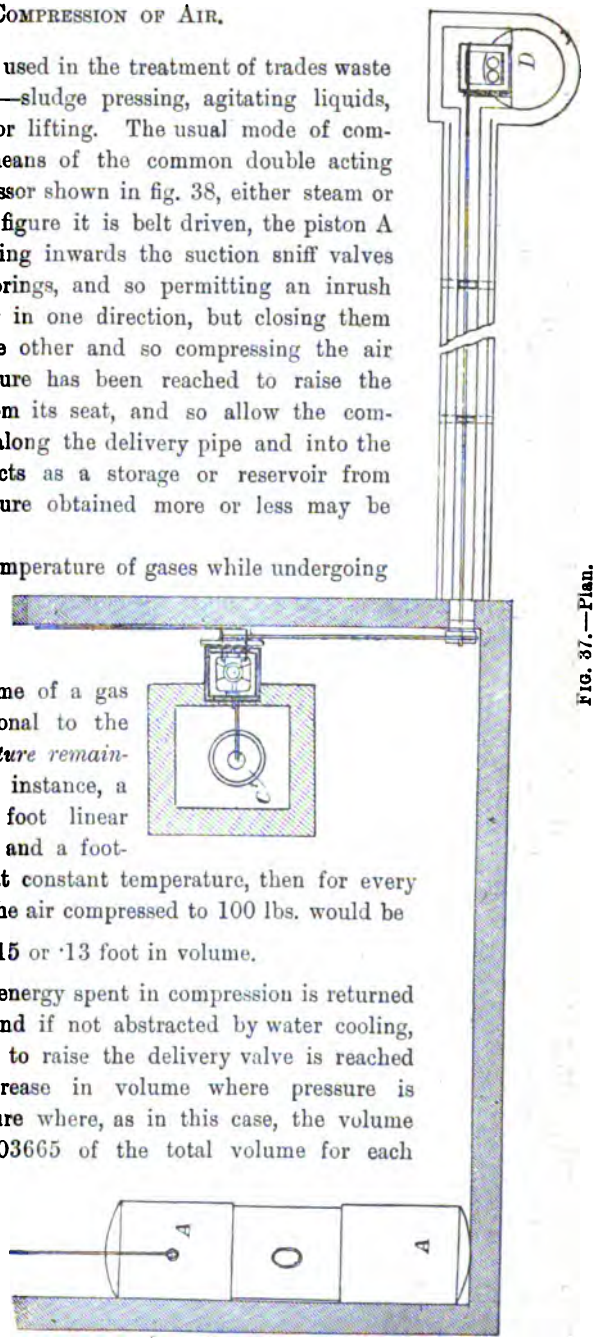

FIG. 37.—Plan.

The rise in the temperature of gases while undergoing compression is the cause of serious loss with a compressor of this form. The volume of a gas is inversely proportional to the pressure, the *temperature remaining constant*. If, for instance, a cylinder having a foot linear sweep of the piston and a foot-area could be kept at constant temperature, then for every stroke of the piston the air compressed to 100 lbs. would be

115 : 15 or ·13 foot in volume.

But the mechanical energy spent in compression is returned in the form of heat, and if not abstracted by water cooling, the pressure required to raise the delivery valve is reached prematurely (the increase in volume where pressure is constant, or in pressure where, as in this case, the volume is constant, being ·003665 of the total volume for each degree C. the temperature is raised), and the air is delivered at the required pressure *hot* only to fall in

PLATE V.]

Blackburn Corporation Sludge Pressing Plant.
W. Stubbs, A.M.Inst.C.E., Engineer.

[*To face page* 40.

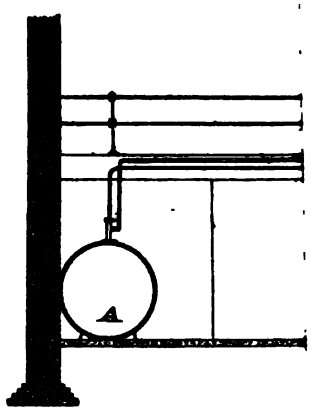
A

pressure when cooled in the receiver or at the point of application. Even where a considerable amount of water is kept circulating in the jacket, high temperatures are reached when the pressure approaches 100 lbs. In one case a temperature was recorded on a compressor examined by the author of 160° C. in spite of a good water circulation. Air delivered at this temperature and 100 lbs. pressure would at the atmospheric temperature at the time, 20° C., and 100 lbs. pressure, occupy only $\frac{293}{453}$ or about three-

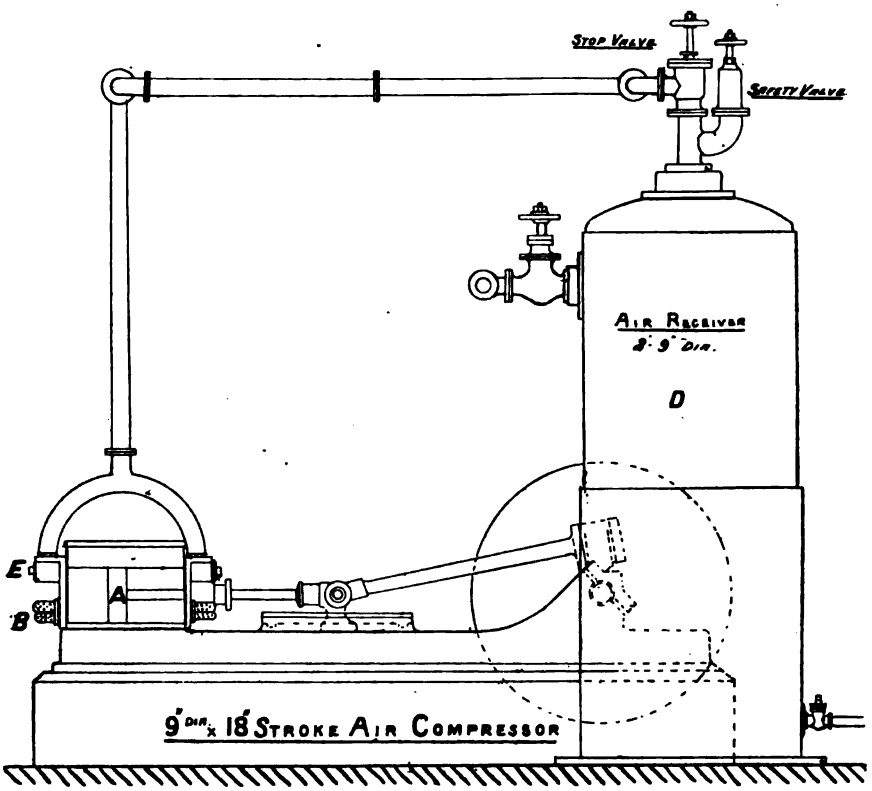

FIG. 38.—Common type Air Compressor.

fourths the volume. As the volume remained constant in the receiver the pressure fell proportionately—to 75 lbs. Thus 25 per cent. of the energy was wasted entirely, and cases are recorded where losses are greater. An indicator diagram taken off another compressor working at 100 lbs. is here reproduced (fig. 39). The piston is moving from A to B, and the curve A E D shows the actual rise in pressure up to the point of delivery valve being raised and the portion of the stroke D C the air delivery at 100. As seen above, this length, D C, should form ·13 of the total stroke. Here, owing to rise in pressure due to increased temperature, it forms ·17 of the

stroke, and the curve A E D would have been at constant temperature (isothermal compression) as A F K.

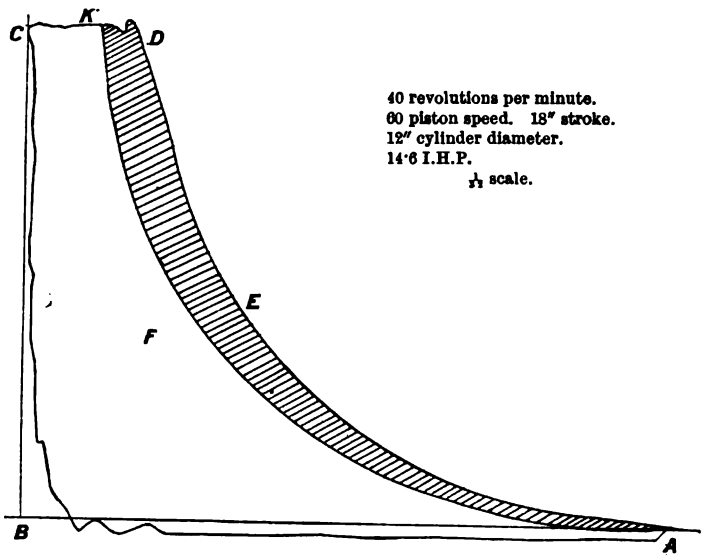

FIG. 39.—Diagram of Air Cylinder Water Jacketed Compressor, Barnhurst Sewage Works, Wolverhampton.

As an example of what a compressor ought not to be, Mr W. J. Jenkins

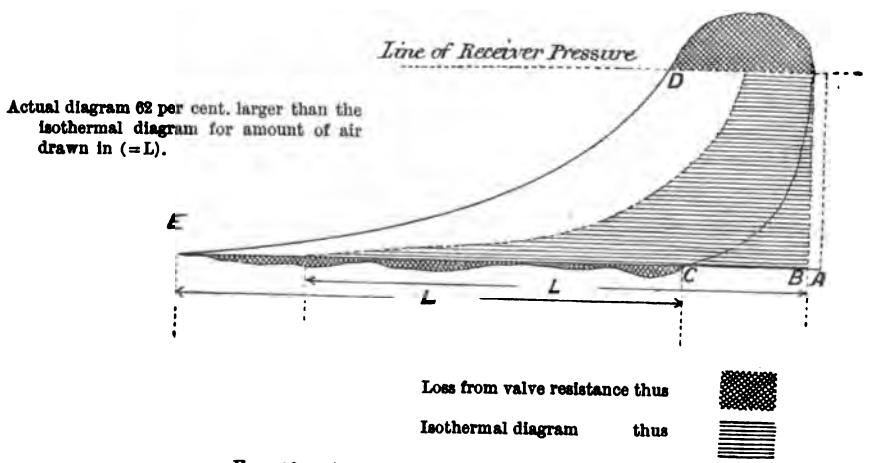

FIG. 40.—Actual Diagram showing Defects.

(Manchester Association of Engineers) instances the diagram in fig. 40 as one actually taken.

The piston, on starting from B, is backed by compressed air from too great a clearance (or possibly from leaking delivery valves) and reaches C before the air inlet valves open. These being small cause a partial vacuum to be maintained from this point almost throughout the stroke. At E compression commences and continues to D, when owing to restricted delivery the pressure of the receiver is overreached considerably during delivery. What with heating, valve resistance and leakage, only 40 per cent. of the work done is returned. Of the defects shown here, however, overheating is by far the commonest.

Efficient cooling cannot really be obtained by a water jacket, but requires the actual injection of sprayed cooling water, which is delivered with the air, and which so keeps the cylinder cool internally. An arrangement for this is shown in fig. 41, Calladon's compressor,* used largely on the Continent and in America, though not so much in England. The air cylinder has a hollow piston and rod, the latter prolonged as a tail rod. The circulation round the cylinder jacket *b* and spaces *a* is maintained by a subsidiary pump driven off the compressor motion. But in addition to this, cooling water is conducted by means of the copper pipe G and the tube *f*, along which the tail rod slides (a tight gland being provided) to the interior of the tail rod *via* the tube C and annular space K, and to the interior of the piston itself, round baffle *e*, and away by the flexible rubber pipe *i*. Water is also injected by an independent pump at the points Z in form of spray, the amount being regulated according to circumstances. The air delivery valves P are in this case at the lowest point in the cylinder to permit the exit of water by gravitation. Under these conditions the temperature does not rise above 95 F. and the whole apparatus is kept smooth and cool at sixty-five revolutions per minute and an air pressure of 75 lbs. Fig. A^{II} shows the sniff or suction valve, A^{III} and A^{IV} the spray nozzles.

The most economical and, at the same time, the most scientific method of compressing air is that adopted in many collieries where air is used for power in the mines—rock drills, coal-cutting, etc. Here the air is both compressed and used in stages. In compressing, say to 100 lbs., the first stage of compression is to 45 lbs. only. This is delivered into a receiver at about this pressure, from which a second compressor draws it through cooling tubes and compresses up to, say, 80 lbs., and a third in the same manner completes the work on it by raising it to 100 lbs. or more. When being used expansively in doing work it is first expanded, say, to 70 lbs. only, and this expansion reduces the temperature as before described and as in a system of refrigeration. Before being again expanded it is allowed to stand in a receiver in the engine room, where the temperature rises to that of the atmosphere, the pressure increasing proportionately, and this is repeated a

* Spon's *Supplement to Engineering Dictionary.*

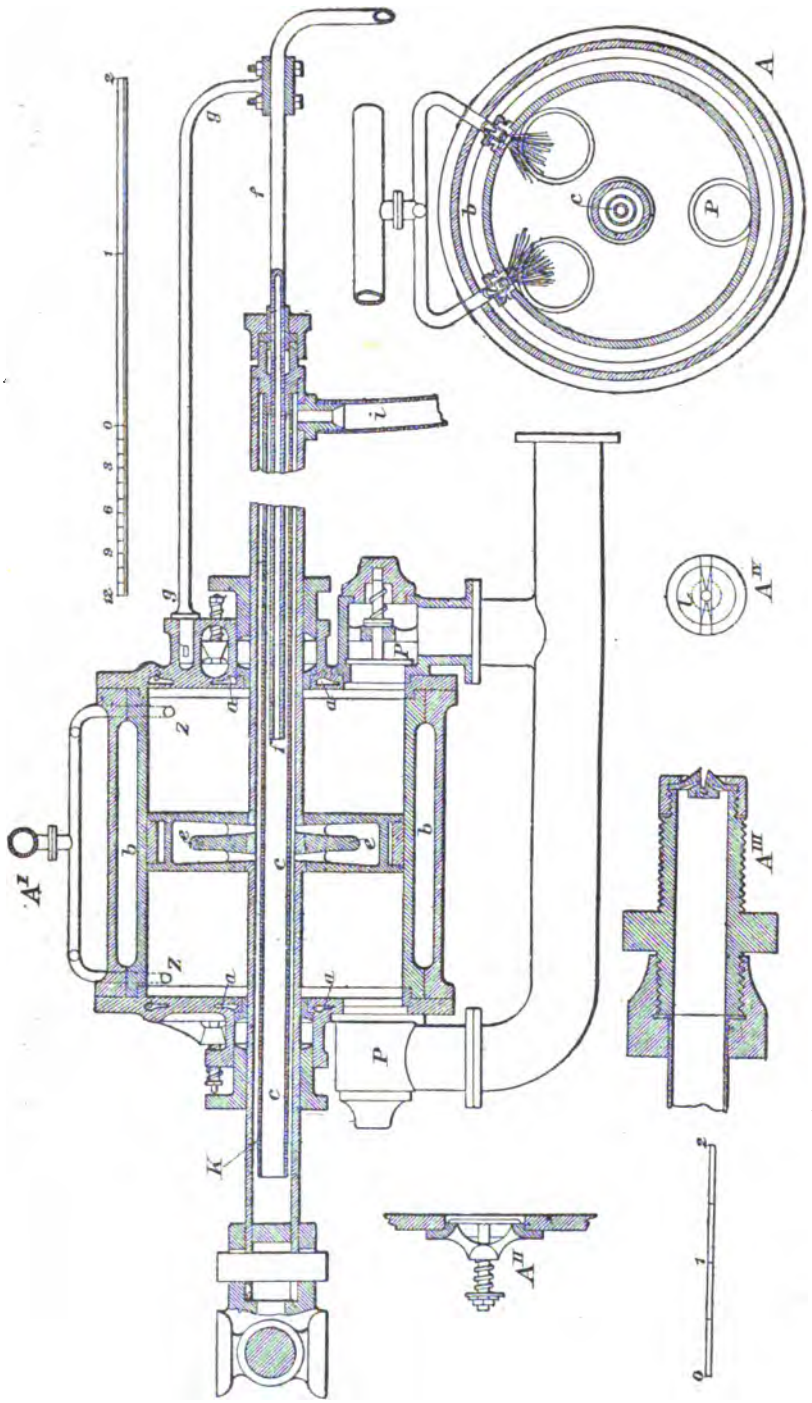

FIG. 41.—Calladon's 'Water Spray' Compressor.

second and a third time. By such means, instead of a 25 per cent. loss on the work of compressing, an actual gain is experienced.

In all the compressors mentioned above, the trouble of knocking, due to improper distribution of crank stress, comes pre-eminently above all minor troubles of wear and tear, such as leaking, suction and delivery valves, sticking valves, and uneven wear, which are overcome in some machines by positive opening and closing, as in a Corliss steam engine (Walker's

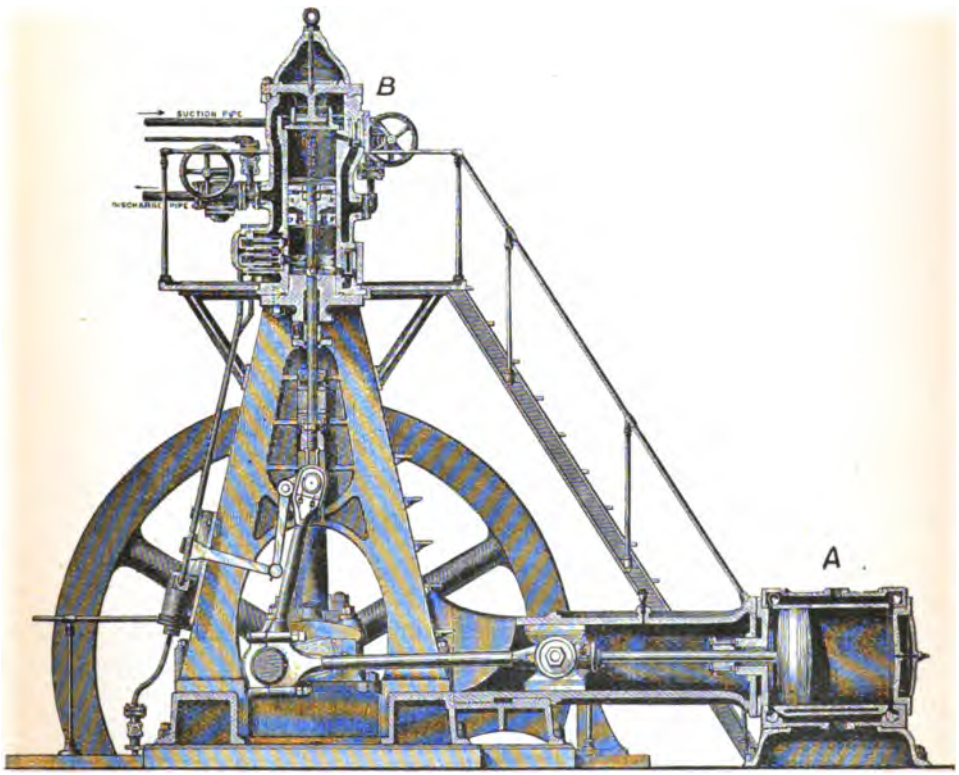

FIG. 42.—De la Vergne Compressor.

compressors). It will be seen from diagram, fig. 39, that the real work of compression, that is, the greatest resistance to the air piston, begins about two-thirds down the compressing stroke. Now with a direct steam driven compressor, the greatest pressure of steam, the admission being at the beginning of the stroke, is reduced practically to zero at the end, a condition of things exactly contrary to what is required. The work available at the beginning of the stroke, therefore, when it is not required, is taken up by the flywheel which, gaining an impetus, is pulled up suddenly by the air resistance at the end of the stroke, causing a knock and shock which in more

than one case has either pulled the compressor off its bed or broken the crank shaft. This condition of affairs is best met by an arrangement of 'toggle' levers, such as seen in the compressor made by the De la Vergne Refrigerating Co., fig. 42, though this is used for ammonia compression only. The steam cylinder is at A, but the air cylinder B is placed at right angles with its connecting crank so adjusted that the steam admission (greatest power) meets the greatest resistance—end of the air cylinder stroke.

A cheap compressor of this type with positive action valves and spray water cooling would probably result in the use of compressed air to a much greater extent than at present. Considering its cleanliness, freedom from danger or freezing, ease of transmission as a power, and the fact that it can either be used as delivered or stored indefinitely, it is surprising it has not asserted its advantages over steam, water power, electricity or power gas, more than it has.

Messrs Downham & Co. of Bury have just introduced a very interesting and useful air compressor, Taylor's patent, figs. 43 and 44, diagram 9, which very fairly attempts to overcome the necessity of a water jacket by giving the air cylinder (planed outside and seated in a bearing) a rotary motion imparted by a ratchet and teeth on its periphery at A, fig. 43. Instead of spring induction or sniff valves, the air cylinder has also a backward and forward motion to the extent of $\frac{1}{8}$ inch along its horizontal axis, the ends B remaining stationary and so acting as valve seats, the cylinder body itself being the valve.

The backward and forward movement of the cylinder body is due to the cushion of air between the moving piston and annular flanges C at the end of and inside the cylinder which form the valve faces. Instead of a connecting rod from the steam cylinder an inclined crosshead having a planed seat (similar to the old-fashioned dog link) is provided and an adjustable block B working on the crank pin, the effect being to give a slower motion towards the end of the stroke. The heavy flywheel helps this over the dead centres very well, but, as is always usual with this motion, the crank shaft bearing is 'punished.'

The revolving cylinder, too, evidently jerks the piston rings, for in spite of copious lubrication a little air always leaks past the piston at the compression end, and out through the opposite open end, though this is not sufficient to make itself seen on the indicator diagram. The inlets are so large, however, that very considerable leakage would be necessary for it to be seen on the atmospheric side. On the other hand, there is no unusual fall on the compression side. Of eight diagrams taken by the author, two are reproduced here (fig. 45). The whole of the series were identical. That from the air cylinder is a good one, in fact better than most from water-jacketed compressors, the comparative proximity of the actual compression curve to the isothermal showing no great rise of temperature.

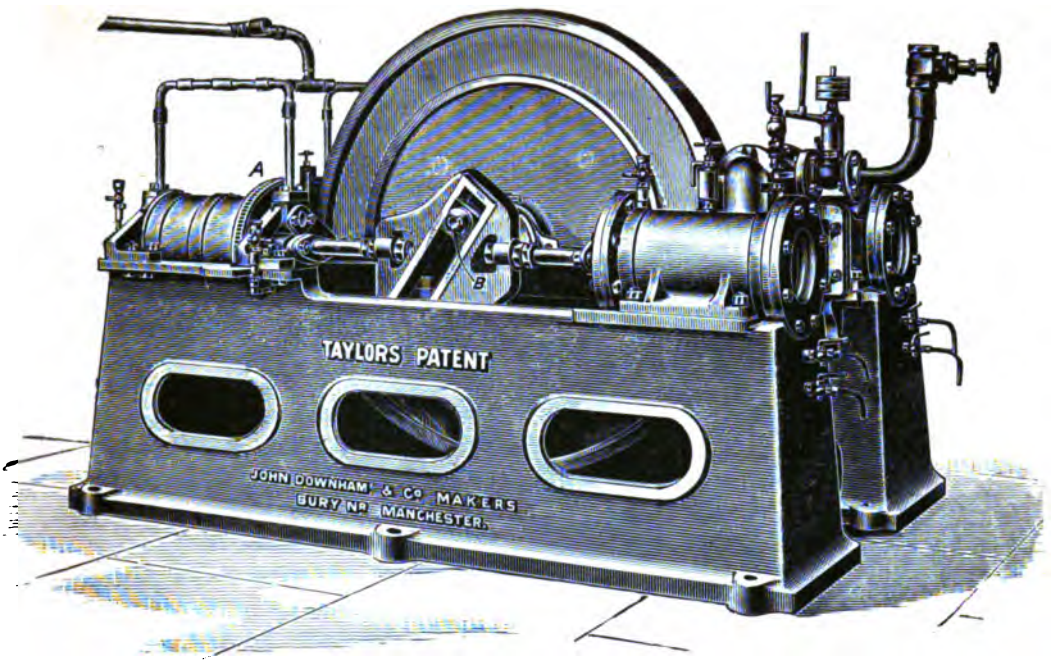

FIG. 43.—The Taylor Patent Air Compressor without water jacket.

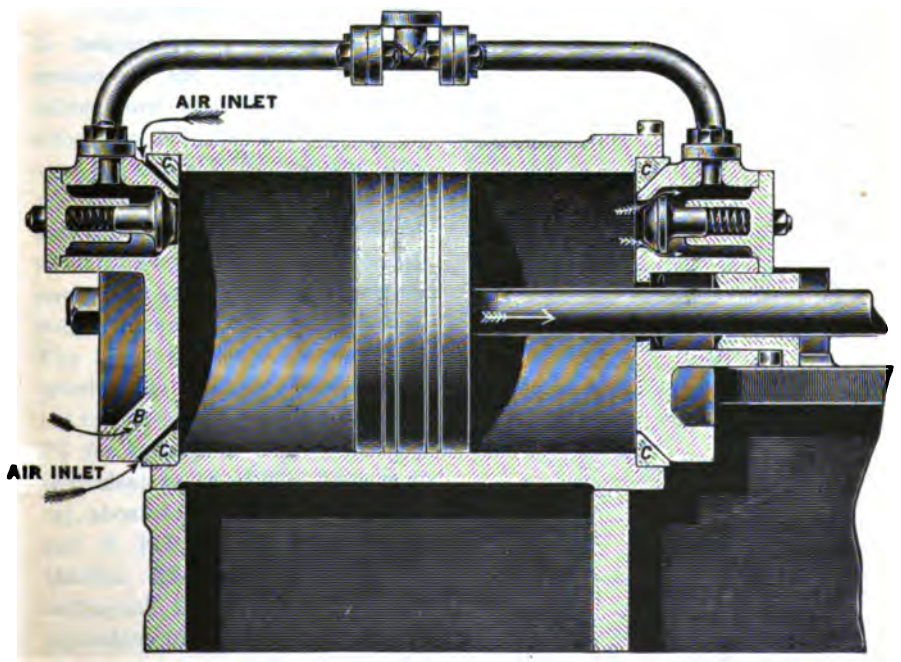

FIG. 44.—The Taylor Patent Air Compressor. Section through air cylinder.

[*To face page* 46.

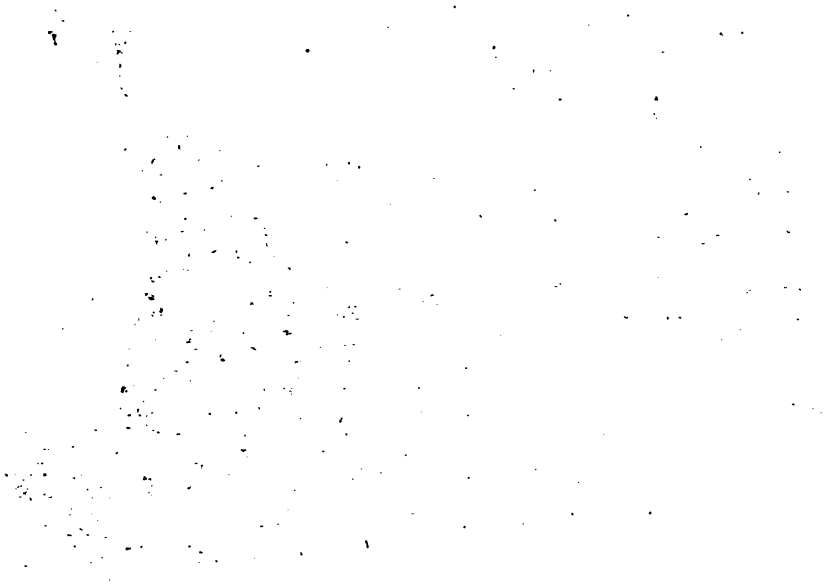

The mean pressure opposed to the air piston is 37·6 lbs. per square inch, equivalent to 8·79 H.P., while the isothermal curve represents 30·2 lbs. mean pressure, equivalent to 7·02 H.P. or 80 per cent. of that exerted on the air piston and 73 per cent. of that exerted on the steam piston. The ratio between steam and air piston area is evidently at fault for the boiler pressure in this case, there being little or no steam cut off; but on the whole (and this was the first made) the results must be described as very satisfactory compared with many. At the Roach Bridge Paper Mill, for instance, one is used for lifting waste liquors a matter of thirty feet for treatment in precipitation tanks. It has 3 feet 6 inch stroke and runs at seventy-two revolutions, or *a piston speed of 504 feet per minute.*

Though water-jacketed, the rise in temperature is so great that certain of the original air inlet valves have been done away with altogether and the working stroke now begins on 7 lbs. vacuum. As will be seen by the diagram, fig. 46, atmospheric pressure is only reached about one-third down the pressure stroke, and half way down the suction stroke there is a vacuum of 10 lbs. The mean resistance on the compression side of the air piston is 15·7, but to this must be added a mean of 7·7 for vacuum or a total of 23·4, equivalent to 18 H.P. That is to say, about 12 H.P. for compression and 6 H.P. for overcoming the vacuum. The mean pressure for the isothermal curve E B F is 10·1, equivalent to only 22 per cent. of

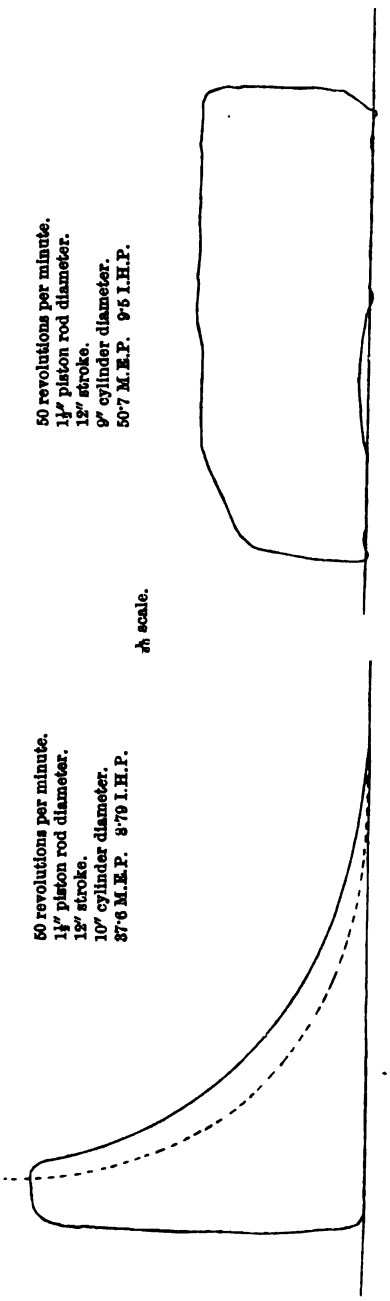

FIG. 45.—Taylor's Air Compressor. Diagrams of Air and Steam Cylinders.

the work done on air piston as compared with 80 per cent. in the Taylor compressor. The isothermal C D H for the cylinder working without vacuum has a mean of 24·5, or about that actually exerted on the piston, and would deliver the volume of air H K as compared with that actually delivered, F K.

The methods of raising liquids are so familiar to all manufacturers having waste liquors to deal with that but little need be said here of pumps, or of the power required for, or methods of fixing them.

The raising of sludge or semi-solids, however, is worthy of more remark. The simplest, and probably the safest and most reliable, method, economical

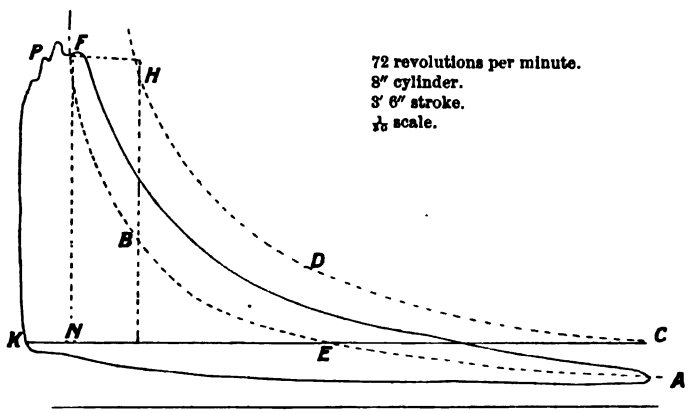

FIG. 46—Roach Bridge Paper Mill, near Preston. Diagram of Compressor, Air Cylinder.

withal if the apparatus only be kept tight, is that of the bucket or chain pump. For raising large quantities to a considerable height in little time ram pumps are preferable, but very efficient screening must precede the pumping, and all valves should have hand holes over them. In addition, whether grid valves, clack valves, rubber (central fixed) or brass plate valves, the seats themselves should be made easily detachable. As a rule, when trouble from river pollution follows the stoppage of a pump, the cause of stoppage is claimed to be leaky valves. Either the valve has become worn or the spindle or hinge pin, if it be a clack valve, and a new valve must needs be fitted to a new or worn spindle while the pump waits. Under such circumstances the valve seat should be bolted on studs into a recessed casting, the nuts on studs being flush with the surface and a box key used for pulling up.

A suitable pump for the work is shown in fig. 47, Gould's Triplex Power Stuff Pump, but it should be specially provided with valves and with four standards for keeping the crank shaft perfectly rigid. As

stocked, the valves are bronze balls, and the pump is made specially heavy.

Figs. 48 and 49 show Messrs Evans & Sons' 'Reliable' steam pump for pumping thick liquids. In the engraving showing piston valve arrangements the arrows show the direction in which the liquid flows in and out of the pump. It has a hollow floating piston valve dispensing with both suction and delivery valves and works well, especially where the reception well is about three or four feet deeper than the end of the suction pipe, so as to permit of the accumulation of sand and grit likely to cut the floating piston. It can be reversed without in any way complicating the suction and delivery arrangements, and this qualification renders it valuable where the suction is likely to get choked, as by reversing the pump it is driven clear.

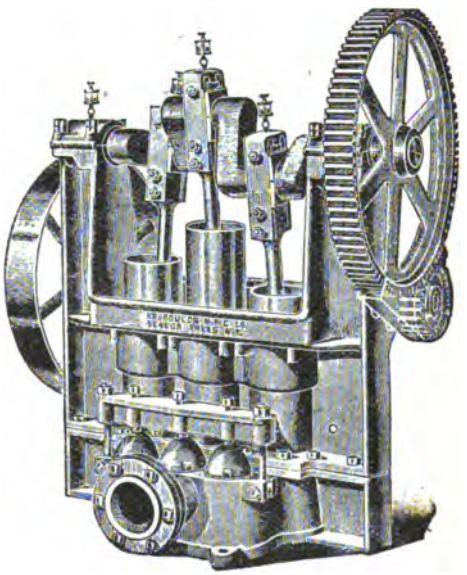

FIG. 47.—Gould's Triplex Power Stuff Pump.

The sludge from brown paper mills and the like generally contains grit which is liable to jam the piston valve in the casing, especially when fibrous matter is mixed with it, and for this class of material, including crude liquors of a like nature, Messrs Evans' Cornish Steam Pump (fig. 50), fitted with ball valves (fig. 50A), is very suitable. It is arranged with a distance piece made sufficiently long to allow of the piston making its full stroke without the pump end of the piston rod entering the steam cylinder. This prevents objectionable matter getting into the steam cylinder at all, or lubricant from the steam cylinder getting into the pump in cases where the liquids being lifted must be kept quite clean. All parts can be examined by the lifting of covers only and without the disconnection of any pipes.

For ordinary liquids in this pump there are no tappets, the common slide valve being attached to, and in fact part of, a cylindrical plunger in the steam chest which has motion imparted to it, alternately right and left, by a smaller plunger propelled by the steam under expansion, which is admitted at a certain point towards the end of the main piston stroke.

At this point is a port through which steam enters and by which the small plunger is driven. Both are cushioned by live steam from the chest,

and this prevents the striking of covers or caps. The pump can be arranged for driving by compressed air.

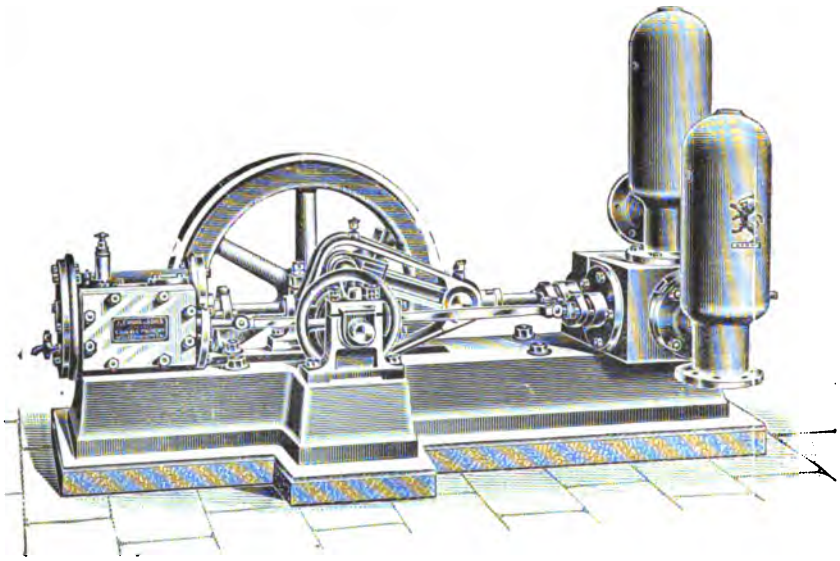

FIG. 48.—Evans' 'Reliable' Reversible Double Acting Steam Pump with Piston Valve.

Another well known form of pump ought to be mentioned here, the Worthington steam pump. The general design of this (fig. 51) is for lifting liquids containing no great amount of solids, but it is also made with a special valve (fig. 51A) through which an object two inches square may pass. This valve and seat combined can be easily replaced.

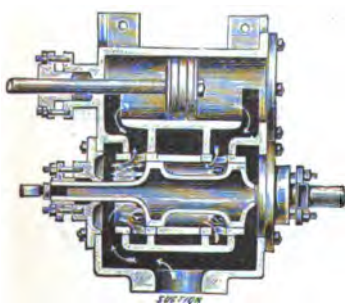

FIG. 49.—Piston Valve arrangement of Evans' 'Reliable' Pump.

The illustration (fig. 51) is arranged to show more particularly the valve motion of the steam cylinder. Thus, E is the common D slide valve, and receives its motion by a vibrating arm, F, which swings through the whole length of the stroke, the piston on one side controlling the valve on the opposite side. This does away with eccentrics or crank motions. As one of the four admission ports is always open to live steam, the pump may be started at any point. The double acting plunger or ram, B, is kept well up above the inlet and outlet valves and can be refitted or exchanged easily and cheaply.

A plunger of different size also can be readily substituted, according to the weight of the liquid and the lift. The fixing of the plunger out of reach

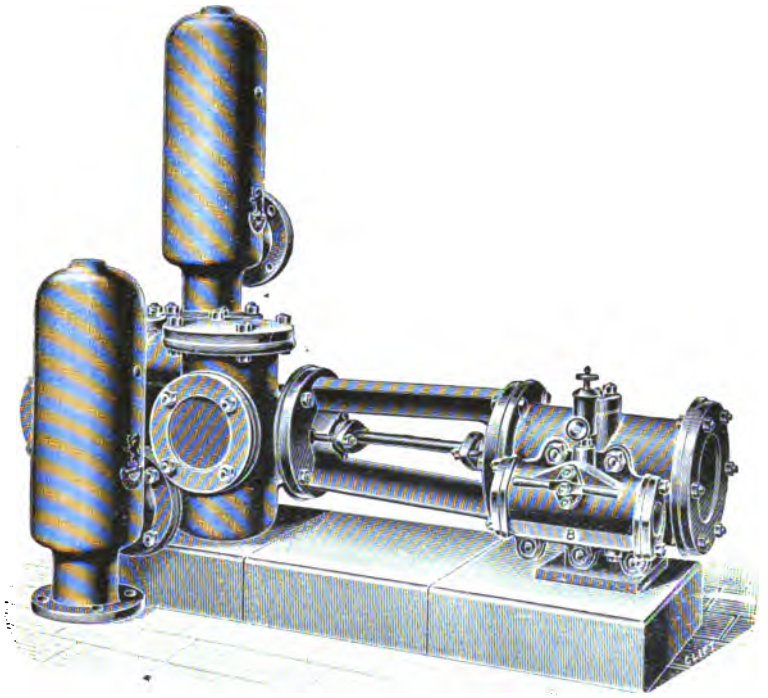

FIG. 50.—Evans' Cornish Steam Pump, with long distance piece and without tappets.[1]

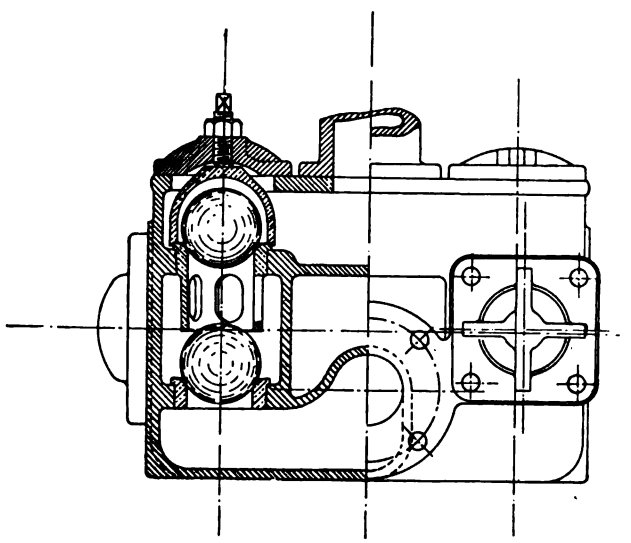

FIG. 50A.—Cornish Steam Pump, Ball Valves.

of the valves entirely necessitates larger pump barrel space, but provides a subsidence chamber into which any grit may fall below the wearing surfaces. C is the suction and D the delivery.

Another pump, English, made on very much the same lines, is Evans' Duplex Steam Pump (fig. 52), the valve motion being the same, while the pump end may be fitted with bucket, valves, plunger, or ram, suitable for any liquid for which the pump may be required.

Although compressed air as usually obtained is not an economical power for raising sludge, it is, by means of a Shone's ejector, exceedingly convenient. Such an ejector as illustrated in fig. 53 was put down by the

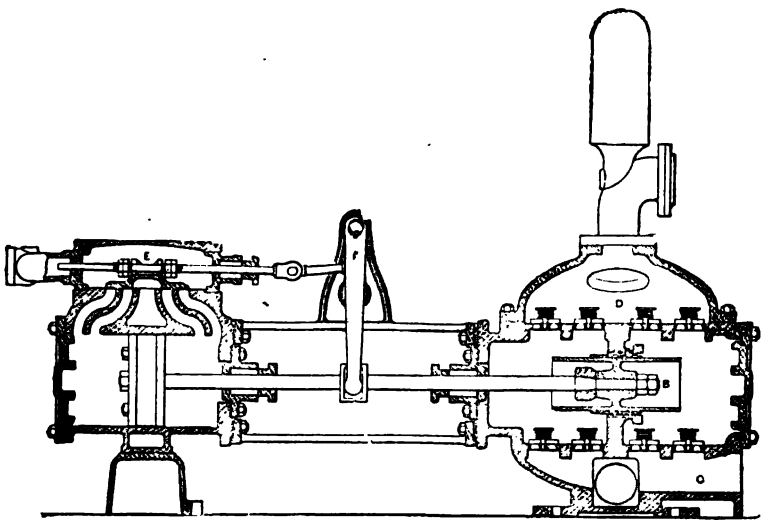

FIG. 51.—The 'Worthington' Pump.

author for lifting bleach works sludge at Messrs Stanning & Sons' works, Leyland, amongst other places, in 1894, and has worked ever since without a hitch. The lift is about 30 feet and the air pressure used 17 lbs.

The following correct description of its action is from Messrs Hughes & Lancaster's circular:—

"The sludge gravitates from the tanks through the inlet pipe A into the ejector, and gradually rises therein until it reaches the underside of the bell D. The air at atmospheric pressure inside this bell is then enclosed, and the sludge, continuing to rise outside and above the rim of the bell, compresses the enclosed air sufficiently to lift the bell, spindle, etc., which opens the compressed air admission valve E. The compressed air thus automatically admitted into the ejector presses on the surface of the sludge, driving the whole of the contents before it through the bell-mouthed opening at the bottom, and through the outlet pipe B into the iron rising main or delivery

pipe, as the case may be. The sludge can only escape from the ejector by

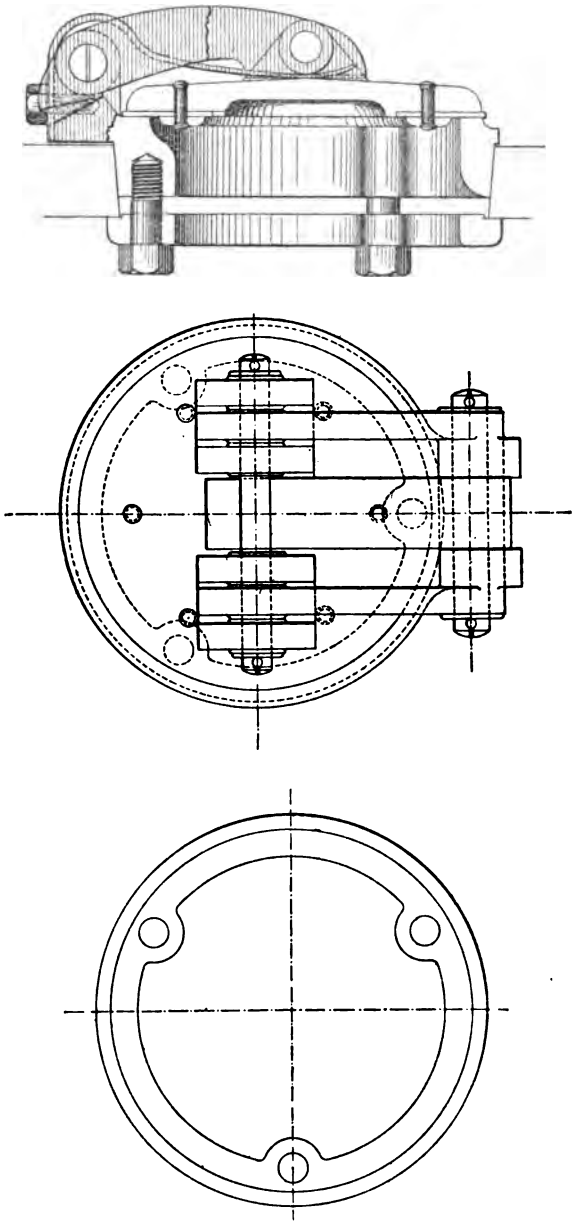

FIG. 51A.—Worthington Sewage Valve.

the outlet pipe, as the instant the air pressure is admitted on to the surface

of the fluid the valve on the inlet pipe A falls on its seat and prevents the fluid escaping in that direction. The fluid passes out of the ejector until its level therein reaches the cup C, and, still continuing to lower, leaves the cup full until the weight of the liquid in the portion of cup thus exposed and unsupported by the surrounding water is sufficient to pull down the bell and spindle, thereby reversing the compressed air admission valve, which first cuts off the supply of compressed air to the ejector and then allows the air within the ejector to exhaust down to atmospheric pressure. The outlet valve then falls on its seat, retaining the sludge in the delivery pipe, and the

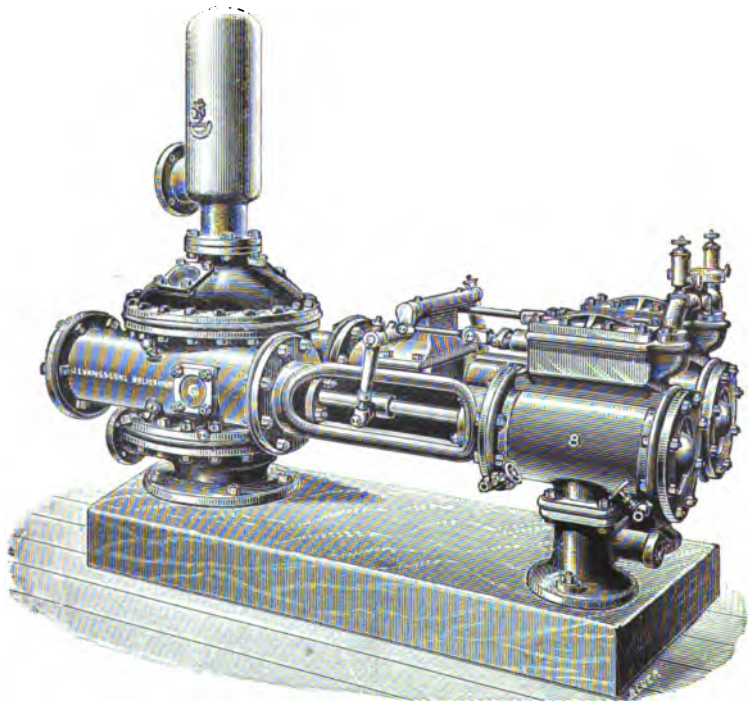

FIG. 52.—Evans' 'Duplex' Steam Pump.

fresh sludge flows into the ejector through the inlet once more, driving the free air before it, through the air valve, as it rises; and so the action goes on so long as there is anything to flow.

"The positions of the cup and bell floats are so adjusted that the compressed air is not admitted to the ejector until it is full of sludge, and the air is not allowed to exhaust until the ejector is emptied down to the discharge level.

"The advantage of this apparatus may be summed up as follows:—

"(1) The working parts are reduced to a minimum, and are of a kind not likely to get out of order.

"(2) The parts of the apparatus into which the liquid enters contain no tooled surfaces, such as are unavoidable in pumps, to get rapidly destroyed by the action of the sludge and grit, etc. In the ejector there is nothing but the hard skin of the castings, coated with Dr Angus Smith's composition, upon which the sludge can produce no detrimental effect.

"(3) The friction of a pump piston and other working parts is avoided,

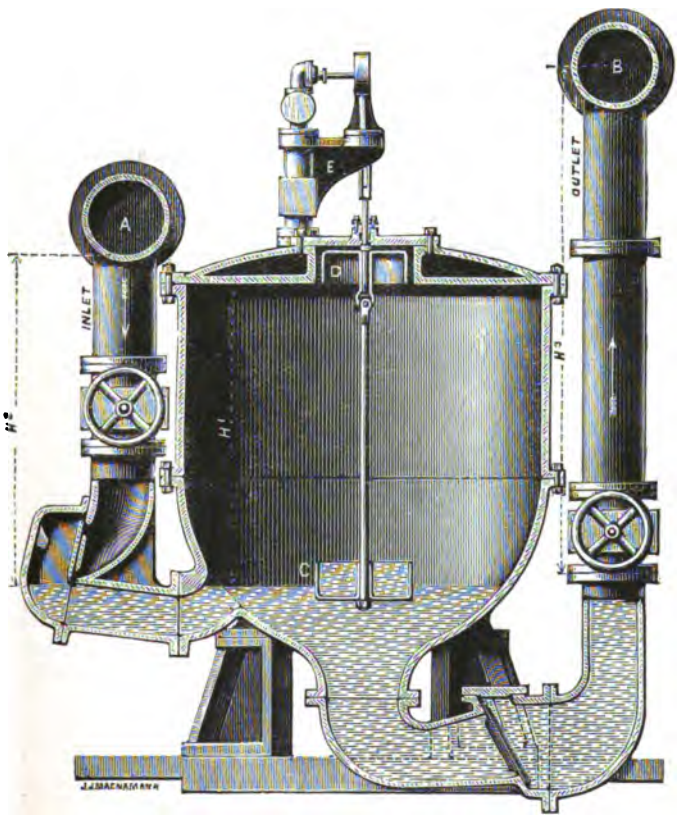

FIG. 53.—Shone's Compressed Air Ejector.

the compressed air itself acting direct upon the fluid, without the intervention of any machinery, and forming an almost absolutely frictionless and perfect air piston, past which there can be no slip or leakage whatever.

"(4) The cup and bell float arrangement is one that cannot possibly get out of order, as an ordinary rising and falling float would be liable to do.

"(5) The only tooled parts are those in connection with the small

automatic air valve, which makes only one movement of two or three inches for each discharge of the ejector (50 to 1000 gallons, according to the size of the ejector). The valve is out of the reach of sludge, and is only in contact with the compressed air.

"(6) The sludge inlet and outlet valves are so arranged that they give passage-ways of the full area of the inlet pipe, allowing a free passage to all the solids that the inlet pipe itself can carry.

"(7) The outlet is from the bottom of the ejector, so that the heavier parts of the solids, sludge, grit, etc., brought down are discharged first out of the ejector.

"(8) For the reasons given, no screening or straining is necessary, as is the case with pumps, and the great nuisance caused by the cleaning of pump gratings and sump wells is avoided."

In using these ejectors trouble is often experienced in obtaining a reliable reducing valve to place on the air mains between the receivers, say at 100 lbs., and the ejectors at the required pressure for the particular lift.

The usual form of reducing valve (fig. 54) depends upon the low

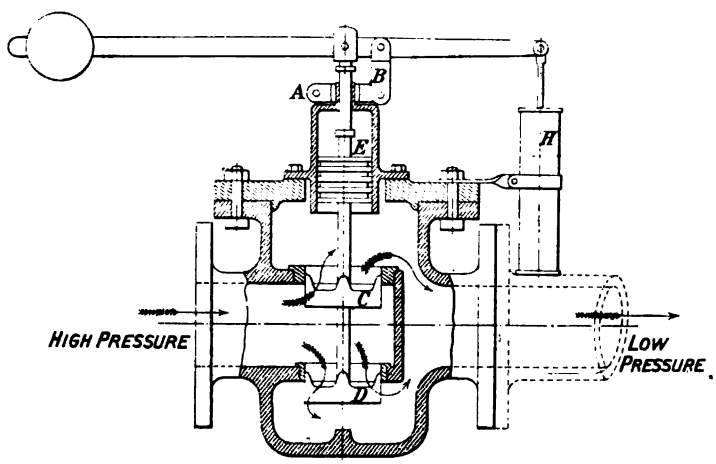

FIG. 54.—Reducing Valve for Air Ejectors.

pressure main forcing up the piston E, which is set against an adjustable spring, and so closing the inlet valves C and D. The spring is set after loosening the clip at A. The cylinder H is filled with oil, so as to form a dash pot and steady the fall of the weight. Where the difference in two pressures is not great, the valve acts reliably enough but not otherwise.

In reducing from, for instance, 100 lbs. to 10 lbs., if the spring be set at 10, with 100 lbs. on the receivers, the air mains will drop to 4 or 5 when the receivers are nearly empty; in fact, they will probably not be supplied when the receivers are below 25 lbs. If, on the other hand, the spring be

set at 10 lbs. when the receivers stand at about the same pressure, then when the receivers stand at 100 lbs. the air mains register 20 lbs. In case the spring is set at 10 with receivers at 50, then the air mains fluctuate between 15 and 8, according to the pressure in receivers. In short, the range of the spring is too great, and the reduction must be brought about in two or three stages, say from 100 to 80, 80 to 40, and 40 to 10.

The 'Griffin' valve, used by the author on the Croston Sewage Works, is a much better one and reduces continually from 109 or any lower pressure to 10 lbs., with a variation of not more than 2 lbs., and that always on the higher side. Being without weights, levers, or projections, it occupies comparatively little space.

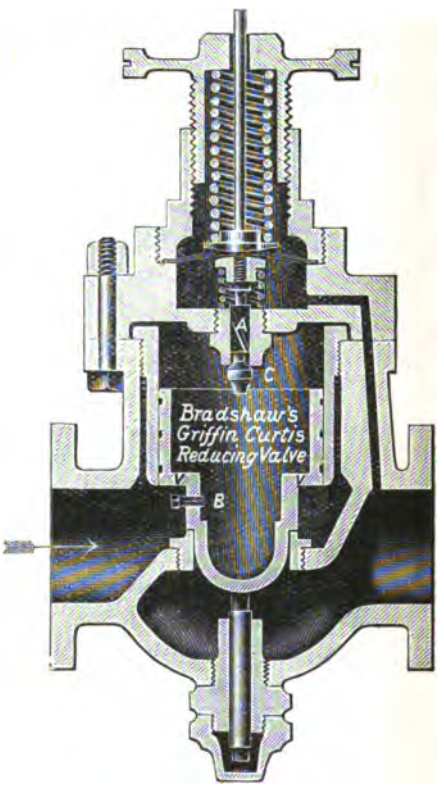

FIG. 54A.

The valve V (fig. 54A) is pierced by the bored adjustable set screw B and so stands in equilibrium between the high pressure main and the spring set in accordance with the low pressure.

When this falls, due to draws on it, so does the spring and pierced piston A. Air escapes through the aperture A (when subsidiary valve C drops) at a greater speed than it enters through the plug B, and the main valve V is raised until the lower pressure is again sufficient to raise the spring and so bring the high pressure main and interior of main valve into equilibrium. By these means the spring forms no part actually of the valve between the two pressures, but simply controls it and is not subject to great extremes, the range being probably not more than four or five pounds in ordinary ejector work.

FILTRATION OF TRADES WASTE.

For the removal of suspended solids from liquids, mechanical interception by means of filters is the method *par excellence*, as questions of specific

gravity, velocity of current, shape of particle, upward tendency of particles, etc., can be ignored.

The points for consideration are :—

(1) The relations between the size of the filter interstices and that of the particles to be intercepted.

(2) The soluble content of the suspending medium.

(3) The means of removing the intercepted particles.

Of these the third is by far the most important, introducing serious expense.

To construct a filter for temporary use is a simple matter indeed. A bed of sand, cinders, gravel, straw, in fact insoluble powdered material of any kind so long as it be sufficiently fine to bring about the desired interception, is enough. But the particles so intercepted soon choke the filter and must be removed unless they consist, as they may do in some few cases considered hereafter, of organic matter liable to be disposed of bacterially and exist under conditions favourable to such disposition.

One common method of meeting the circumstances, especially in cases where the whole of the water supply to a factory requires filtration, is to provide an immense area of filter beds of cinders to a depth of about 3 feet subdivided into three or four plots, and covered with a six-inch layer of very fine ashes, which top layer of one portion is removed as it becomes choked, another plot or portion being used meanwhile. But where factories have been for some years in operation and the prevention of rivers pollution is called for, the necessary space is rarely available and other methods must be adopted. A high speed filter is then required, typical instances of which are the 'Candy Clarifier' and the Riddell Filter.

The 'Candy Clarifier,' as shown in fig. 55, consists of an under cylinder or casing A, at the bottom of which is a false bottom or perforated plate B resting on supports B^1 and B^2. On this plate rests the filtering material, which may be any material, though sawdust is generally used. This may be pressed more or less closely together by means of the plate E, capable of being raised or lowered by the hollow shaft E^1, attached to which is the cogged plate E^3, geared up with the tooth wheel E^2, shaft E^4, and winch E^5. When the filtering material has been packed, the foul liquors are introduced at H^1, passed through the material and out at L^1, cleansed, K^1 and M^1 being closed. For the purpose of cleansing the fouled material, the top plate E is raised, so loosening the sawdust or sand, and the winch *C* is turned, causing the arms C^1 to revolve, while washing liquor, clean or foul, is introduced at K^1 under a head, and escapes, foul, for settlement by precipitation or otherwise at M^1, the valves L^1 and H^1 of course being closed.

It is a most effective clarifier for manufacturers' waste liquids, where frequently the bulk of the objectionable matter is in suspension, but strange to say it has been used more frequently at sewage works where its advan-

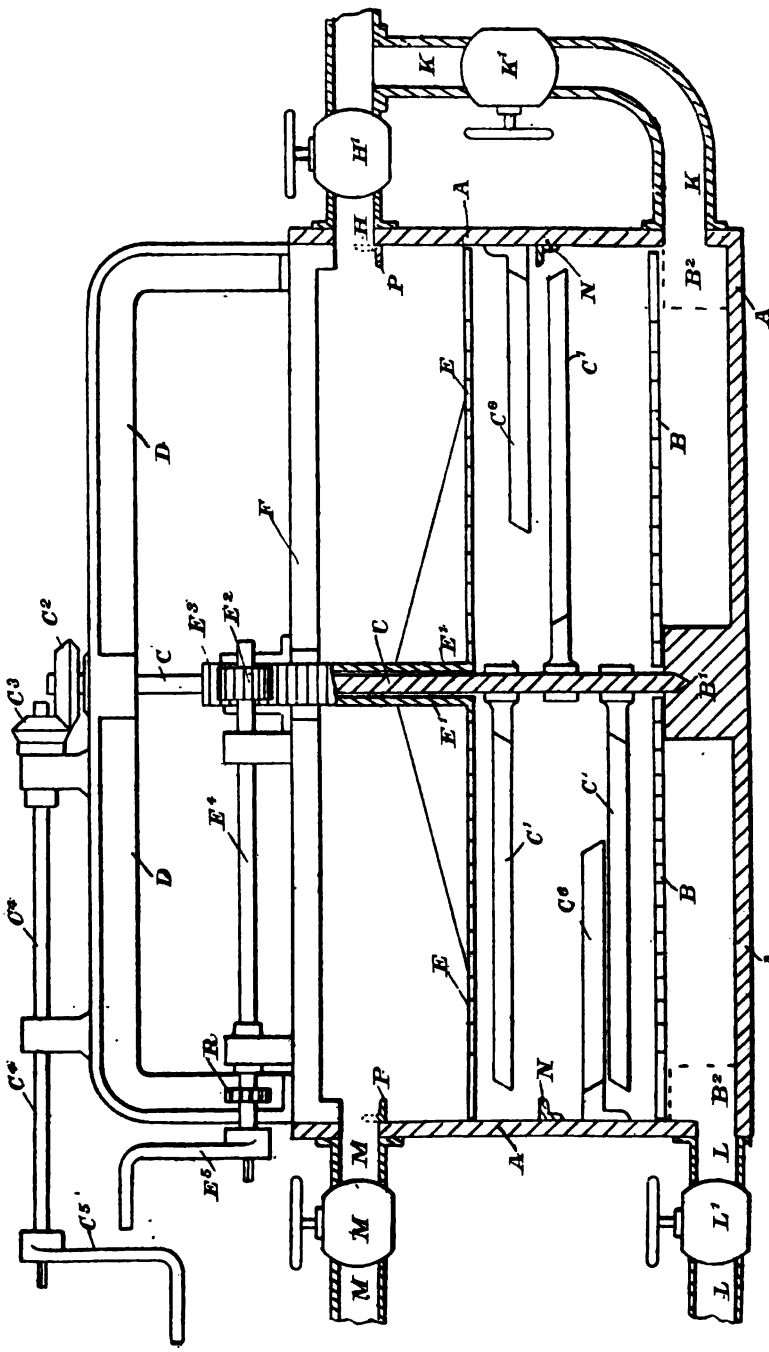

FIG. 55.—The 'Candy' Clarifier.

tages have not the same scope, and where, too, the after treatment to which the clarified liquid is submitted is often also sufficient for it in its condition before clarification. Its drawbacks are those common to all filters of this class—the trouble of washing the filtering material and the disposal of the foul washing liquors. In spite of these, however, it might be applied with great advantage in many cases to give the finishing touch to an imperfectly adapted precipitation tank at paper, bleach, and woollen mills.

It is rarely that effluents from precipitation tanks contain less than 2 to 5 parts per 100,000 suspended solids, and in addition, owing to fairly strong saturation with dissolved solids and a temperature above atmosphere for the time being, some sedimentation takes place in the streams. If in cases where a final bacterial filtration (see chapter on Brewing and Distilling) cannot be brought about, a thorough aeration be effected by some such system as that of Messrs Mather & Platt (by which means the excess of dissolved solids above what the effluent will permanently carry are frequently liberated with the scum formed), followed by a filter of this description, sedimentation in streams will be considerably diminished.

The 'Riddell' Filter, figs. 56 and 57, has a metal (mild steel) shell A, and is fed by the pipe B with foul liquor, which passes through the filtering material D and is collected by means of strainers E at the bottom, to be discharged by the clean water pipe F. Radial arms H are attached to the hollow hub J at the lower end of the pipe K. By means of the piston on pipe K these arms may be raised or lowered within the filter on pressure from a special water main or pump being brought on either side of the piston. Through the same arms, too, water under pressure from the same source may be delivered through jets in the arms for the washing of the filtering material. O is the exhaust from upper side of piston and connected with waste pipe. The filter is worked under pressure, and an effluent entirely free from suspended matter is delivered.

It has been for some time in successful operation at Crewe (L. & N.-W. Ry.) dealing with 600,000 gallons of river water per diem, and at Messrs J. R. Crompton Bros., Bury, with 450,000 gallons per diem, and at other places. It does not, however, work so well with liquids containing large quantities of dissolved solids, such as effluents from bleach, tanning, and paper mills.

Dr C. A. Burghardt gives the following results from samples drawn before and after passing through the filter:—

April 28, 1897.

Sample No. 1.—From the pipe delivering water direct from the river at Messrs J. R. Crompton Bros.' Mills, Bury.

„ No. 2.—Filtered water, ditto.

„ No. 4.—Taken from the lodge which was supplying the filters at Messrs Robert Fletcher & Sons' Mills, Stoneclough.

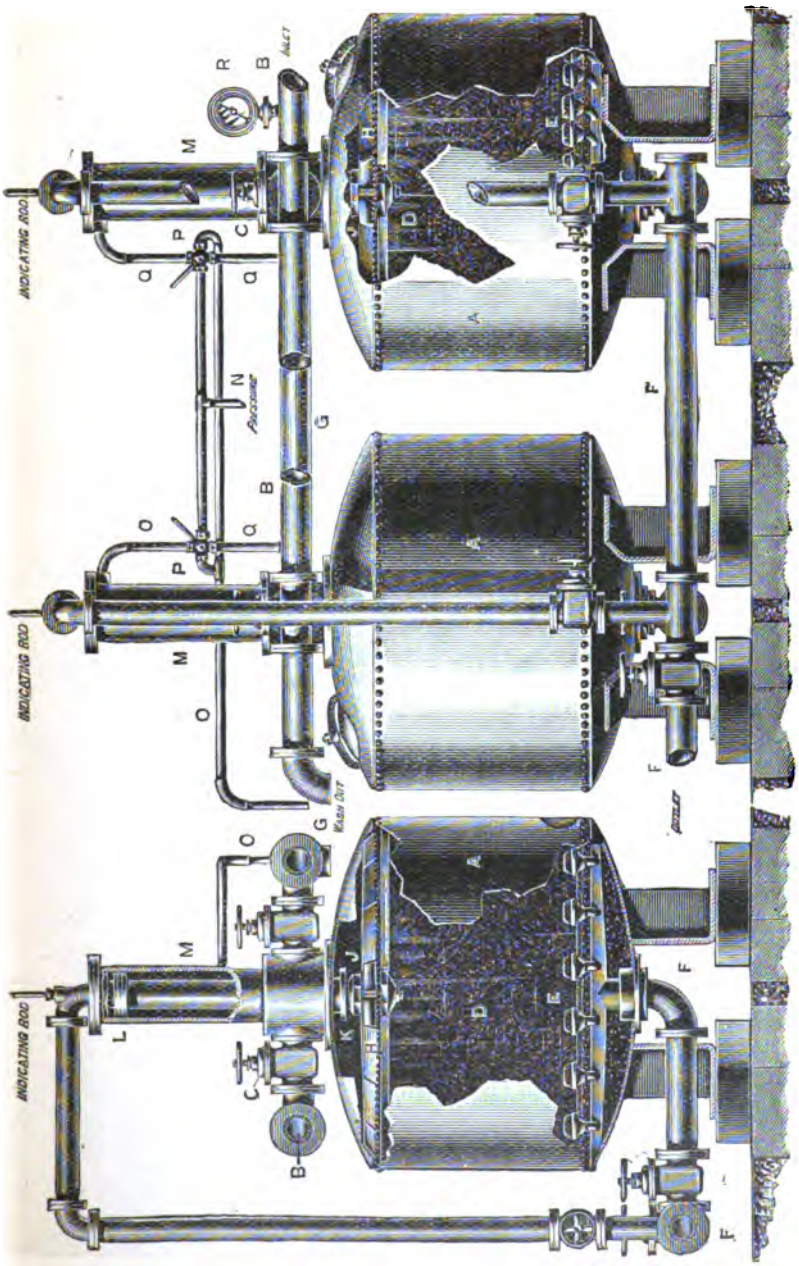

FIG. 56.—The 'Riddell' Pressure Filter.

Sample No. 5.—Filtered water, ditto.

„ No. 6.—From the pipe delivering water direct from the River Irwell, at Messrs Langworthy Bros. & Co., Limited, Salford.

„ No. 7.—Filtered water, ditto.

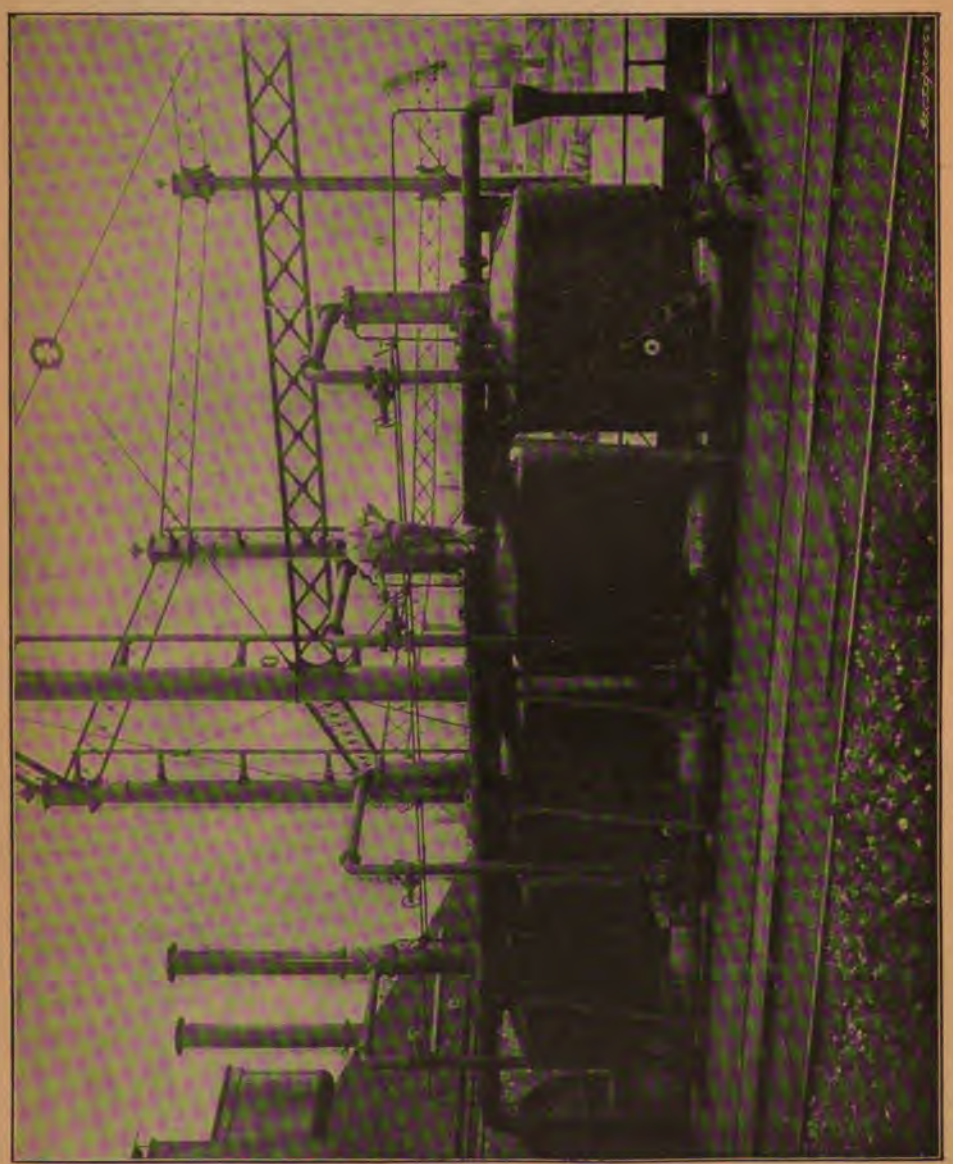

FIG. 57.—The 'Riddell' Filter, L. & N.-W. Ry. Co.'s Gasworks, Crewe.

In Parts per 100,000.

	No. 1. River.	No. 2. Filtered.	No. 4. Lodge.	No. 5. Filtered.	No. 6. River.	No. 7. Filtered.
Total matter in solution, . .	50·4	47·2	49·6	49·2	59·6	57·2
Mineral matter, ...	33·6	32·0	38·0	38·4	44·8	40·8
Loss on ignition, . . .	16·8	15·2	11·6	10·8	14·8	16·4
Sesquioxide of iron and alumina, .	1·2	0·4	0·6	0·4	1·2	0·4
Suspended matter, . . .	4·0	Nil.	1·4	Nil.	4·0	Nil.

Organic Matter.

	No. 1.	No. 2.	No. 4.	No. 5.	No. 6.	No. 7.
Oxygen required to oxidise the organic matter in three minutes,	0·99	0·49	0·096	0·048	0·64	0·30
Do. do. in four hours, . .	3·232	1·61	0·29	0·17	1·74	0·80
Free ammonia, ...	0·470	0·126	...	...	0·24	0·18
Albuminoid ammonia, . .	0·112	0·056	...	...	0·12	0·06

The Pulsometer Engineering Company have a well known filter, the 'Torrent' Filter (fig. 58), but this is only suitable for filtering liquids contain-

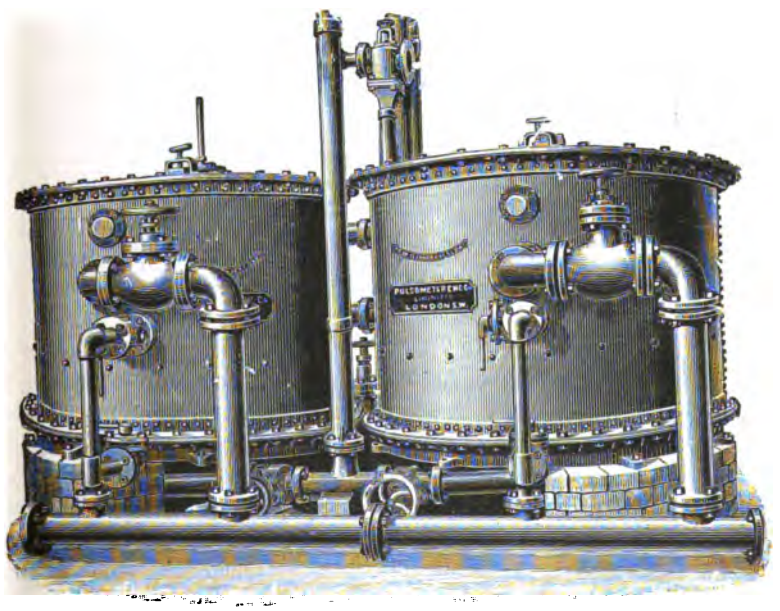

FIG. 58.—The 'Torrent' Pressure Filter.

ing comparatively small quantities of suspended solids, and those not of a slimy nature but such as may be easily intercepted. This filter is cleansed

by a reversed current with forced air, and is used in some cases for water containing as much as 80 to 100 parts per 100,000 (as in the Thames, at Blackfriars); but in such cases the percentage of wash water must be a consideration, and dependent upon the character of the intercepted solids.

For dealing with canal or river water to be used for scouring or washing purposes, they are very suitable.

The 'Birch' system of settlement and filtration is well worthy of considerable notice, although it has not been largely adopted. Originally it was intended for sewage principally, and the patentee (erroneously in the author's opinion) devoted too much of his energy in attempting to apply it to the purification of sewage.

Essentially the treatment is precipitation and mechanical filtration. For

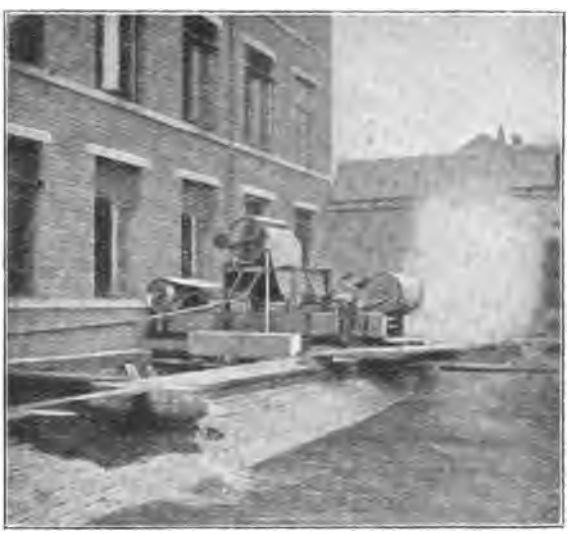

FIG. 60.—'Birch' Filter.

sewage, containing as it does much organic matter in solution not affected, it was, therefore, doomed. True, it was first tried before so much information concerning the action of bacteria on sewage was to hand, and when even the 'Polarite' filters were assumed to be entirely mechanical in action. Since then, however, it has been fairly conclusively proved that while Polarite filters are exceedingly good mechanical filters, probably better than four or five feet of sand used mechanically only, their continuance depends on the bacterial disposal of the intercepted matter in the 'Polarite,' and also that much bacterial action takes place in the material surrounding it.

Of the Birch precipitation tanks little need be said except that, as shown in fig. 59 diagram 10, and fig. 60, and in the photograph of those at Messrs Calvert Bros.' Oakenshaw Printworks (Plate VI.), they are entirely above

PLATE VI.]

Birch's Precipitation Tanks at Oakenshaw Print Works, Accrington.

[*To face page* 64.

DIAGRAM 10.

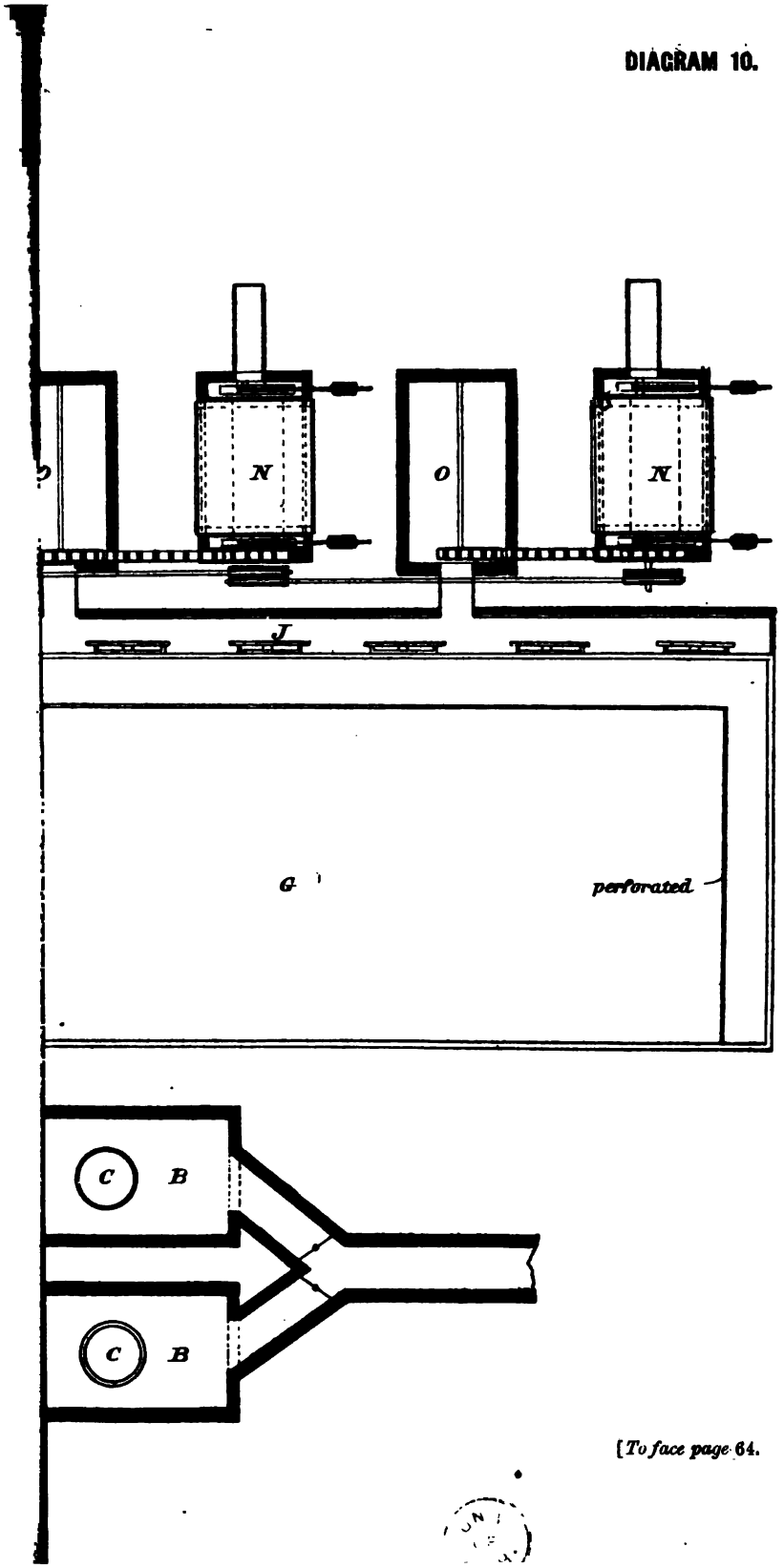

[To face page 64.

ground, the shell being cast iron panelled plates bolted together and held transversely by tension rods. The actual inlet at F is after the silt traps B and C, the precipitant being passed *en route* at E. After traversing the tank the liquids emerge at K *via* the trough H as tank effluent, for treatment on the filters L, while the sludge is withdrawn at J from grooves V running across the tanks.

The filter L for tank effluent consists of an endless revolving cloth of cotton, the cloth having a pile, face uppermost, and dipping in the centre between the rollers. The tank effluent is delivered on to the cloth in the dip, and to assist the percolation of the water through the cloth a very ingenious contrivance in the shape of a narrow roller is placed just under the dip in the loaded cloth, which induces a continual stream of clear water to pass, the suspended particles being left entangled in the pile.

The cloth is kept continually moving; and at one point in its path, just as it is on the angle of descent, that is, the cloth vertical and the pile horizontal, a line of water jets is made to impinge continually thereon and so very effectually scour the pile. These jets are played by a pump worked off the general motion of the machine. This motion is obtained from a water wheel driven by the falling tank effluent down the shoot M.

The whole contrivance is clever and would be effective if worked with care under a constant volume of liquor having a uniform composition. But it can hardly lend itself to constant changes in liquid trades waste, and moreover the mechanisms are too delicate to be handed over to the usual class of caretaker appointed to 'get rid of' trades waste be it much or little, weak or strong, and who can rarely be persuaded that the business is really worth any trouble at all, much less that involved in hurriedly refixing trippet or cam motions, repairing or withdrawing torn cloths, or withdrawing sludge from a tank until it is sufficiently dense to stand stiff on a spade.

The sludge from the tanks gravitates to ponds O, from which it is elevated by means of 'Jacob's' ladder chains or buckets and delivered between another endless felt and roller N. The felt is pulled tightly on the roller so as to cause the water to either pass through it or be retained in its fibre, from which it is mangled out at another point in its course, while the solid sludge is regularly scraped off the roller at certain points in its revolution by a 'doctor' or scraper, actuated by a lever and weight and timed by tooth gearing. Sufficient 'pull,' however, to get the sludge fairly dry cannot be obtained on the cloth without either tearing it or stopping the machine; in fact, the latter throughout has too much of the 'textile factory' about it.

For the bacterial filters referred to in the chapter on Brewers' and Distillers' Waste the necessity for sprinkling the putrid waste is pointed out. Absolutely continuous sprinkling of such liquids gives rise in some cases to a fungoid growth on the surface of the filter on any part continually subject to the dripping; but this growth is avoided by intermittent

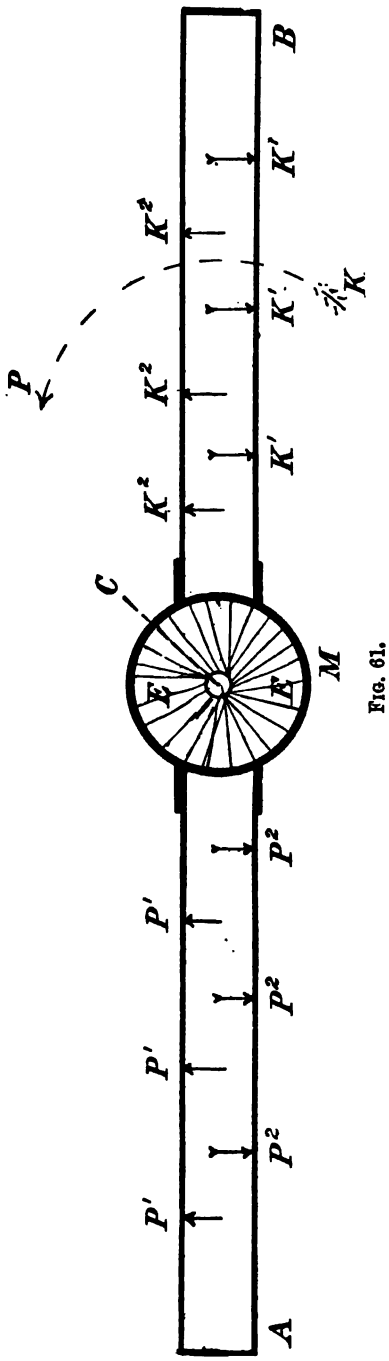

Fig. 61.

sprinkling. Intermittent sprinkling is also necessary from the fact that, with a distribution of less than 100 gallons per yard, and in some cases where a deep filter is inadmissible this is as much or more than a shallow filter will take, continual sprinkling cannot be maintained, because the head of water is insufficient to overcome the inertia of the sprinkler. Let, for instance, A B represent a sprinkler in plan (fig. 61) before drilling, balanced on a point C and charged with liquid by the funnel E, and closed at A and B. It will remain stationary, the water pressure in every direction being equal. Let the horizontal pressures be represented (equal and opposite) by arrows. If, now, holes be drilled at the points K^1 along the side M B, the pressure is lost in that direction and exerted only in direction K^2 on the side of M B, tending to cause the pipe A B to revolve in the direction K P on pivot C. And if at the same time holes be drilled at the points along the side A M, this tendency to revolve is increased, because the pressure is only exerted along the side of the tube A M in direction P^2. The actual turning force horizontally is represented by the difference in pressure at either side of the tube; hence the greater the efflux of water the greater the turning force, and conversely the efflux can so be reduced either by diminution of head or reduced size of holes as to cause no motion at all.

If therefore the amount to be distributed in a given time is so small as to give no turning movement, an intermittent discharge and distribution

is necessary. This may be arranged in various ways—the simplest probably being a supply feed trough over the hopper of the sprinkler having a fixed collecting or storage capacity and discharged by a siphon into it as soon as it becomes full. Methods of balancing the sprinkler are shown in figs. 62 and

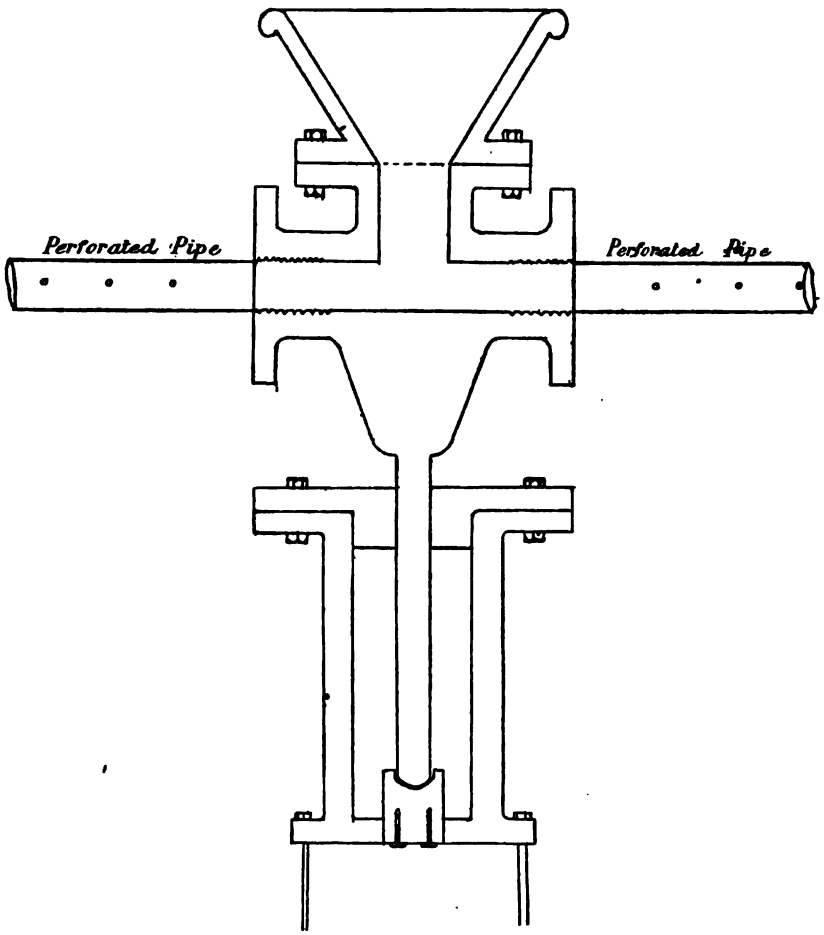

FIG. 62.—The 'Candy Caink' Sprinkler.

63. The revolving speed for a given discharge may be reduced by turning the arms so as to bring the holes below or above their longitudinal axes.

Messrs Mather & Platt have recently introduced a sprinkler with open troughs for arms, the circular motion being obtained by feeding the hopper from below and placing under it, at E, fig. 61, and in the path of the feed, a small turbine. The troughs are perforated for distribution, and this type of sprinkler is probably the best yet introduced.

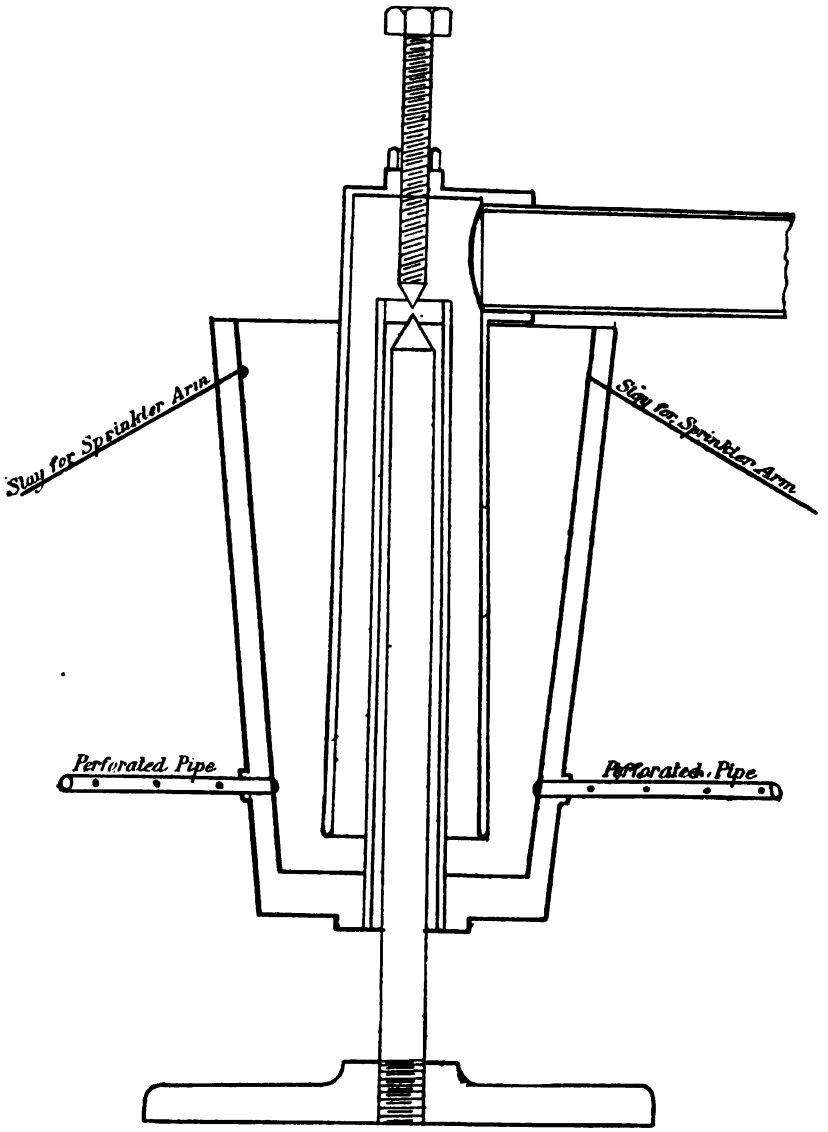

FIG. 63.—The 'Whittaker Bryant' Sprinkler.

EXAMINATION OF MANUFACTURERS' EFFLUENTS FROM A RIVERS POLLUTION POINT OF VIEW.

Whatever class of trade be considered, *suspended solids* ought to be removed from the effluent completely. Almost every stream in many

points of its course is stagnant, owing either to natural or to artificial conditions. At these points the suspended solids are to some extent deposited as sludge or slime. They are also liable to be deposited as slime along the sides of the stream where the flow is sluggish. If the matter be entirely mineral, as from a colliery or slack washing, it affects the vegetation on the banks and the animal life in the stream, whereas if it be wholly or partially organic matter, it decomposes and becomes offensive, and robs the stream of the oxygen natural to it and necessary for the life within it, in addition to silting or depositing its slime.

The commonest laboratory method of estimating solids in suspension is to filter the liquid through a previously dried and weighed filter paper, afterwards washing the paper and solids with hot water, re-drying, and weighing and noting the difference.

This method, where reliable results are to be obtained on crude effluents, becomes tedious. To begin with, filter papers before use can only be brought to a constant weight after lengthy and careful drying; if matters are hurried by an increased temperature, there is danger of scorching; and furthermore, in damp weather, unless a fairly gas-tight weighing bottle be used, moisture is absorbed by the paper before the weighing is completed.

As a shorter method, the author practised for some time that of taking 50 c.c. or more of an *unfiltered* effluent in a platinum dish and also the same volume of the same effluent *filtered*, evaporating both to dryness and taking the difference in weight of dry residues as suspended matter. This, however, though sufficiently accurate for effluents containing large quantities of suspended solids and small quantities of dissolved solids, and giving residues not liable to alter their composition in drying or to absorb moisture readily, was found to be unreliable for those containing less than 10 parts per 100,000 suspended solids, or dissolved solids over 60 or 80 parts per 100,000, or even less when putrid, oxidizable, or liable to change in any way. It happens occasionally, too, that some portion of the dissolved matter is volatile at temperatures under 110° C.; if in such cases a large quantity of suspended solids forms a crust over the dissolved solids a figure too high for suspended is obtained by difference; on the other hand, cases have undoubtedly occurred where a tarry-like crust of suspended solids formed over the dissolved has prevented the oxidation in the one dish which has taken place in the other, and a higher figure has been obtained repeatedly for the filtered effluent.

Except, therefore, when the case is very simple, the following method of estimating suspended and dissolved solids is followed in the laboratory of the Ribble Joint Committee:—

250 c.c. of the sample are allowed to stand in a cylinder A (fig. 64) provided with a draw-off tap about 40 or 50 millimetres above the bottom. After settlement for about three hours the top clear water is run off into

a lower cylinder B. If quite clear this is discarded, and the small amount of liquid with the whole of the sediment passed through a weighed 'Gooch' filter C (fig. 65), made of asbestos cream and protected by a perforated lid. The filter is then washed with hot water, and if the residue be slimy or voluminous, digested in a beaker of hot water, the contents of

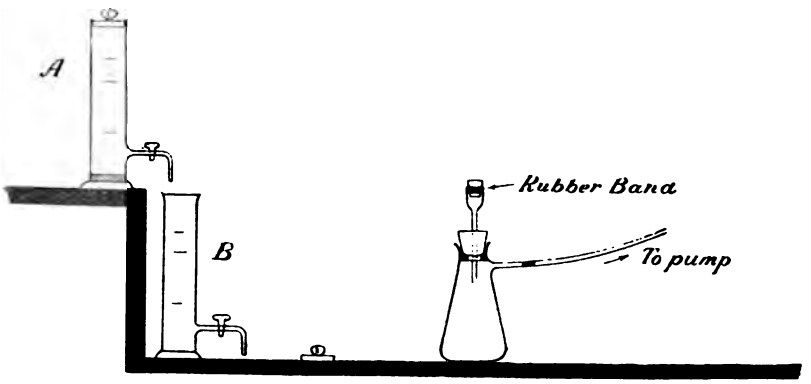

FIG. 64.

the beaker being afterwards passed through the filter. In case the supernatant liquor in B is not clear, it is allowed a further period for settlement of three hours before its deposit, the contents of cylinder A, is filtered. If not clear then, a smaller quantity (50 c.c.) is taken *de novo* and the

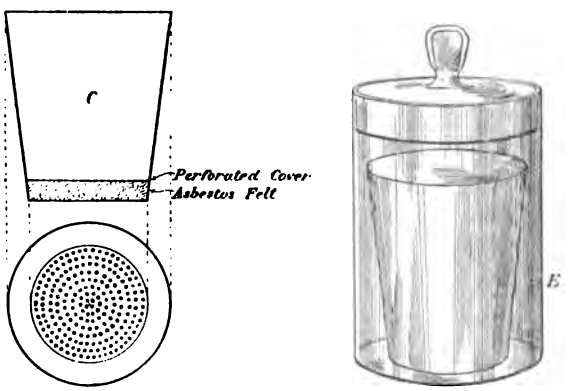

FIG. 65.

whole passed through the Gooch, which is washed as before described and afterwards dried at 110° C. and weighed for suspended solids, in weighing bottle E. Another method is to place it in a centrifugal separator running at about 2000 revolutions, driven by a small electric motor or hand gear. It is then ignited for about five minutes at red heat, cooled, treated

with ammonium carbonate, re-heated, and weighed again for loss on ignition.

The dissolved solids are estimated from 50 c.c. of the filtrate, evaporated and ignited similarly.

In effluents where organic matter of a nature liable to putrefy is likely to be present largely, such as those from breweries, distilleries, fellmongeries, tanneries, abbatoirs, bone works, oil refineries, starch works, and even woollen works and paper mills using dirty rags, the albuminoid ammonia is estimated as an index to the nitrogenous organic matter. The amount of sample taken for examination is 50 c.c. This is diluted with 750 c.c. of water free from organic matter. About 2 grams of pure carbonate of soda are added, and the distillation proceeded with in a retort or flask having a capacity of 60 ozs. until all free ammonia is driven off and 50 c.c. of the distillate gives no coloration with the Nessler test. To the contents of the retort are now added 50 c.c. of alkaline permanganate solution (Wanklyn's strength), which has immediately before been diluted with water free from organic matter and boiled in a retort until 50 c.c. of distillate has produced no coloration with Nessler's test. 200 c.c. of distillate are then obtained as briskly as possible, and 50 c.c. of this Nesslerized in the usual manner. All standard solutions are made up according to Wanklyn.

In paper mills using wood-pulp largely, and in bleach and dye works, the suspended matter only is estimated, so long as the effluent is neutral and not charged with free chlorine. In the cases of the latter class of works, however, where soap is used and no precipitants, the residue from the evaporation of 250 c.c. of the effluent should be extracted with a solvent (carbon tetrachloride or ether) after acidification, and this weighed after the evaporation of the solvent (see Chapter III.).

Objections to mineral dissolved solids can only be raised when they are present to such an extent as to be liable to be precipitated in the stream due to a lowering of temperature, neutralization, loss of acidity, aeration, or any other local circumstance.

The special objections to effluents from chemical works are dealt with in Chapter IX.

CHAPTER III.

WOOL DEGREASING AND GREASE RECOVERY.

BEFORE wool is combed, carded, or dyed it has to be freed from foreign matters—matters either adhering mechanically or matters, other than fibre, in the wool originally and absorbed from the animal system. The latter are of a greasy nature, but before dealing with the treatment of waste washing liquors it would perhaps be advisable to summarize briefly some of the principles involved in their removal.

There exists a body or class of liquids or solids well known as hydrocarbons. As the name indicates, they consist of the elements carbon and hydrogen in combination. These elements combine in numerous but definite proportions, and if an atom of hydrogen is displaced in such a combination by a molecule of HO, an alcohol is formed; as, for instance, from the hydrocarbon propane (C_3H_8) may be formed, $C_3H_7(OH)$, $C_3H_6(OH)_2$, or $C_3H_5(OH)_3$.

Again, if the hydrogen atom of the hydroxyl (HO) in an alcohol be displaced by an acid radicle, a compound ether—ethereal salt, or neutral fat—is formed.

The points to be noted here are: 1st, the ethereal salt resulting from the combination of a fatty acid and the alcohol glycerol $(C_3H_5)(OH)_3$ is a *neutral fat* or glyceride; and 2nd, that the ethereal salt resulting from the combination of a fatty acid and a monatomic alcohol or *any alcohol of the ethane series* is a *wax*.

Thus the following pure neutral fats are derived from combinations of glycerol, and the acids named after each:—

Stearin, $C_3H_5(C_{18}H_{35}O_2)_3$	Stearic acid.
Palm oil, $C_3H_5(C_{16}H_{31}O_2)_3$	Palmitic acid.
Olein, $C_3H_5(C_{18}H_{33}O_2)_3$	Oleic acid.
Castor oil, $C_3H_5(C_{18}H_{33}O_3)_3$	Ricinoleic acid.

These neutral fats may be decomposed either by contact with secondary and more active bases than the radical glycyl (saponification) or by superheated steam (hydrolysis), *e.g.*,

Saponification—

$$(C_3H_5)(C_{18}H_{35}O_2)_3 + 3KHO = 3KC_{18}H_{35}O_2 + C_3H_5(OH)_3.$$

Stearin or fat. Caustic potash. Potassium stearate or soap. Glycerol.

Hydrolysis—

$$(C_3H_5)(C_{18}H_{35}O_2)_3 + 3H_2O = 3C_{18}H_{36}O_2 + C_3H_53(OH).$$

We can now consider the processes of wool cleansing and dyeing. The wool from sheep is enveloped by foreign matter or yolk, and upon the complete removal of this depends the success or failure of bleaching and dyeing operations.

"The perspiration of sheep, which collects on the wool, consists of constituents some soluble and some insoluble in water.

"The constituents insoluble in water dissolve in alkalies. By treating the raw wool with pure water, a solution is obtained which contains many compounds in combination with potassium. The examination of a large quantity of this aqueous solution showed the presence of the following bodies:—

(1) Free carbonic acid.
(2) Carbonate of ammonium, formed by the decomposition of urea.
(3) Potassium carbonate, formed at the expense of certain secretions by a peculiar fermentation.
(4) Volatile fatty acids, including acetic, propionic, butyric, valerianic and caproic acids.
(5) Higher fatty acids, such as œnanthic acid, caproic acid, oleic acid, stearic acid, and some acids of wax, especially cerotic acid. These acids are contained as potassium salts, and are formed by action of potassium carbonate on the acids, during the washing of the fleece.
(6) Fats in the form of emulsions.
(7) Phenol as phenol bisulphonate of potassium, as ether or sulphonic acid (?)
(8) Ordinary lactic acid.
(9) Benzoic acid, formed by the decomposition of hippuric acid.
(10) Oxalic acid.
(11) Succinic acid.
(12) Uric acid.
(13) Amido-acids, glycocol, leucine, tyrosine.
(14) Colouring matters analogous to those of urine.

"Thus the aqueous solution of sheep wool sweat contains all the constituents of the normal urine of herbivorous animals, or at least its decomposition products. Acetic, propionic, benzoic, lactic, and caproic acid are contained in large quantities, and it is possible that this may become a source for them. The suint of an Australian wool, calculated on 100 parts of dried residue, gave 7·1 parts acetic acid, 4 parts propionic acid, 2·6 parts benzoic acid, 2·5 parts lactic acid, and 1 part caproic acid." *

Chevreul seems to have been about the first to divide the constituents of raw wool as follows:—

* "Wool" (p. 133, *Journal of the Society of Dyers and Colorists*, No. 8, vol. ii., August 1886); "Researches on the Chemical Composition of the Suint of Sheep's Wool," A. Buisine, *Chemiker Zeitung*, No. 59, 1886, *Comptes Rendus*, 1886, 103, 66.

	Per cent.
Earthy matter (deposited by washing the wool in water),	26·06
Suint or yolk, soluble in cold distilled water,	32·74
Neutral fats (soluble in ether),	8·57
Earthy matter adhering to the fat,	1·40
Wool fibre,	31·23
	100·00

Another method of analysis is quoted by Hummel in his *Dyeing of Textile Fabrics*, in which the division is as follows:—

Wool fat, extracted by ether.
Oleates (or soaps), extracted by water.
Moisture, extracted by heat.
Dirt and wool fibre residues, separated mechanically.

These may be determined as follows:—

(*a*) Weigh the raw wool, dry it at 100° C., preferably in a stream of any dried inert gas—*e.g.*, hydrogen—and weigh again. The loss in weight gives the moisture present.

(*b*) Extract the dried wool with ether, shake up the ethereal solution with water, in order to remove from it the oleates; evaporate the separated ether to dryness, and weigh the fatty residue. The weight gives the amount of wool fat present.

Evaporate the separated wash water to dryness, weigh the residue, and add the weight to that of the portion soluble in ether, *i.e.*, the oleates.

(*c*) Wash the ether-extracted wool several times with cold distilled water, and evaporate the solution to dryness. The weight of the residue added to the weight of the oleates dissolved by water from the ethereal solution gives nearly the whole amount of alkaline oleates present. The wool is then washed with alcohol; this always dissolves further minute quantities of oleates, the weight of which must be added to the above. Earthy oleates which remain in the wool are decomposed by washing the latter with dilute hydrochloric acid; the acid is removed by washing with water, the wool is then dried and extracted with ether and alcohol. From the weight of the residue obtained on evaporating the two last solvents to dryness, the amount of earthy oleates present in the wool may be calculated. With very dirty wool a good deal of lime is dissolved by the hydrochloric acid, not because of lime soaps but of calcareous dust present.

(*d*) The remaining wool is dried, thoroughly well shaken and teased out by hand over a large sheet of paper in order to remove dirt, sand, etc.; care is taken not to lose any of the fibre, the detached particles of which are collected on a fine sieve, and washed with water till free from dirt. The wool is dried and weighed; the sand, dirt, etc., are determined by difference.

The following analyses of raw wools give the results obtained by the above method of Marcker and Schulze :—

		Wool of Low-land Sheep.	Wool of Full-bred Rambouillet Sheep.	Pitchy Wool.
By successive treatment.	Moisture,	23·48	12·28	18·28
	Wool fat,	7·7	14·66	34·19
	Soluble in water (wool perspiration),	21·13	21·83	9·76
	Soluble in alcohol,	0·35	0·55	0·89
	Soluble in dilute HCl,	1·45	5·64	1·39
	Soluble in ether and alcohol,	0·29	0·57	...
	Pure wool fibre,	43·20	20·83	32·11
	Dirt	2·93	23·64	8·38
		100	100	100

The wool fat referred to in the above is not, commonly speaking, a fat according to the description already given, not being an ethereal salt of glycerin. According to Lewkowitsch * wool fat might most conveniently be divided under the following three heads :—

(1) Free fatty acids peculiar to the wool fat, as shown by B. Schulze, whose papers † are most valuable contributions to the chemistry of wool fat.

(2) Neutral, *i.e.*, saponifiable fats. These are the real saponifiable constituents of wool fat, the cholesteryl ethers and other ethers of fatty acids, *e.g*, ceryl cerotate. Mixed with these characteristic bodies, there may be present some glycerides, remainders of the oil that has been used in oiling the wool.‡ Some text books quote amongst the constituents of wool fat the glycerides of lower fatty acids, but I was unable to find the original source of these statements in the literature, whilst Schulze distinctly states that no glycerol has been found in the wool fat examined by Hartmann.§ I may state here at once that I did not find any glycerol in the samples of recovered grease I examined.

(3) Unsaponifiable matter, under which head we may comprise free alcohols, *e.g.*, cholesterol and isocholesterol, as characteristic for the wool fat, and besides these, hydrocarbons, coming from oils used in greasing wool, which may have been adulterated with (or 'improved' by, as some will have it) a smaller or larger quantity of mineral oil.

Cholesterin, an alcoholic hydrocarbon of the cinnamene series—C_nH_{2n-8}—is found in small quantity in various parts of the animal system, as in the bile, the brain and nerves, and the blood: it forms the chief ingredient of biliary calculi, from which it is easily extracted by boiling the powdered

* *Journal of the Society of Chemical Industry*, vol. xi. p. 184.

† *Berichte der deutschen chemischen Gesellschaft*, vol. v. 1075, vi. 251, vii. 571.

‡ This refers to recovered wool grease.

§ *Berichte*, v. 1075.

gall-stones in strong alcohol, and filtering the solution while hot; on cooling, the cholesterin crystallises in brilliant colourless plates. It is a fatty substance, insoluble in water, tasteless and inodorous; it is freely soluble in boiling alcohol and in ether, also in chloroform, and crystallises from the alcoholic solution in beautiful white laminae having a mother-of-pearl lustre. It melts at 137° and sublimes at 200°. On adding a solution of cholesterin in chloroform to strong sulphuric acid the chloroform becomes purple red, while the sulphuric acid below it exhibits a greenish-yellow fluorescence; the red chloroform solution evaporated in a porcelain capsule turns blue, green, and finally yellow.

"Heated with strong sulphuric acid, it gives up water, and yields a resinous hydrocarbon, $C_{26}H_{42}$ (or $C_{25}H_{40}$?). With nitric acid it yields cholesteric acid, $C_8H_{10}O_5$, together with other products. Heated to 200° with acetic, butyric, benzoic, or stearic acids, it forms compound ethers.

"The acetate and stearate crystallise in needles, the former melting at 92°, the latter at 200°. The benzoate forms thick prisms, melting at 125°–130°. With PCl_5, or strong hydrochloric acid, it yields the chloride $C_{26}H_{43}Cl$, which crystallises in needles, and is converted by ammonia into cholesteramine, $C_{26}N_{43}NH_2$.

"Isocholesterin, $C_{26}H_{44}O$, occurs, together with cholesterin, in the grease of sheep's wool, and may be separated by saponifying the fat, heating the mixture of cholesterin and isocholesterin thus obtained with benzoic acid, whereby they are converted into benzoic ethers, and crystallising those compounds from common ether, the cholesteryl benzoate separating in thick tabular crystals, the isocholesteryl benzoate in slender needles, and from the latter the isocholesterin may be obtained by heating with alcoholic potash. It crystallises from ether or acetone in slender needles; melting at 137°–138°. It does not give any colour reaction with chloroform and sulphuric acid, but in other respects it reacts like cholesterin. Its benzoic ether melts at 190°–191°." *

Allen† thus describes cholesterin:—

"In its chemical relationships, cholesterin behaves as a monatomic alcohol. On adding sodium to its solution in purified petroleum, sodium cholesterylate, $C_{26}H_{43}ONa$, is formed with evolution of hydrogen. By the action of phosphorus penta-chloride, or by heating it with concentrated hydrochloric acid, cholesteryl chloride, $C_{26}H_{43}Cl$, is obtained as a crystalline substance melting at 100°. Cholesterin also reacts with organic acids to form a series of ethereal salts, of which the acetate and benzoate are the most interesting.

"Cholesteryl acetate, $C_{26}H_{43}C_2H_3O_2$, is formed by the action of acetyl chloride on sodium cholesterylate, or of acetic anhydride on cholesterin (see

* Watt's *Organic Chemistry*, p. 518.

† *Commercial Organic Chemistry.*

pp. 314 and 316). It crystallises in small colourless needles, which melt at 92°, and are nearly insoluble in and with difficulty in boiling alcohol, but are soluble in ether.

"Cholesteryl benzoate, $C_{26}H_{43}C_7H_5O_2$, is obtained by heating cholesterin with benzoic acid under pressure. It crystallises from ether in small glistening rectangular tables, melting at 150°–151° C.

"On treating the various cholesteric ethers with alcoholic potash, they readily undergo saponification, and, after evaporating off the alcohol, and treating the residue with water, the cholesterin can be extracted from the aqueous liquid by extracting it with ether."

Steeping the raw wool in water is generally the first operation in woollen mills, but the liquors from the second or scouring process require more attention than do those from the first or steeping process, both on account of their greater volume and greater burden of matter abstracted from the wool.

This burden has already been described as consisting principally of soaps, saponifiable fats, and free alcohols natural to the wool, the adventitious or other natural dirt in the wool removed by scouring, and to these must be added the undecomposed (and, for the matter of that, decomposed) scouring agents used. These liquors are the cause of the bulk of the pollution of rivers by the woollen waste. They vary in composition according to the wool scoured.

A sample taken by representatives of the Bradford Corporation at Mr Speight's works at Thornbury, Oct. 27, 1893, was found by Mr F. M. Rimmington, Borough Analyst, to contain as follows:—

"*Sample of Crude Wool Washing Suds.—Analytical Results in grains per gallon.*

Total sediment,		8380
Organic and volatile matter,	7040	
Inorganic matter,	1340	
Total solids in solution,		5920
Organic and volatile matter,	3280	
Inorganic matter,	2640	
Alkalinity as carbonate soda,		132·5
Grease,		635
Free ammonia,		3·640
Albumenoid ammonia,		4·200."

Mr F. W. Richardson reported on a sample taken for the Borough Surveyor, Bradford, from Messrs Tankard, Scaife & Co., April 9, 1896, as follows:—

	Grains per gallon.
Total grease,	476
Alkali (equal to H_2SO_4),	70·0

The Rivers Pollution Commissioners' third report* cites the following examples of woollen works soap-suds:—

	Messrs Rouse & Co.'s mill at Bradford. Wool washing.	Soap suds from Messrs James Brooke & Son.	Mr Lister, Halifax.
Solid residue grains in a gallon, .	758·94	540·40	1246·0
Fatty matter, ...	518·7	226·20	653·4
Other organic matters, . . .	17·5	Not ascertained.	...
Mineral matter, ...	222·7	,,	...

The least treatment to which these liquors ought to be subjected is 'grease recovery,' whether the process be a successful one financially or not, for although one can easily understand manufacturers questioning the propriety of authorities having the administering of the Rivers Pollution Prevention Acts calling for further expenditure in the purification of waste liquors, with their burdens reduced to say 70 grains per gallon dissolved solids and 2 suspended, and these including no ingredients of a nature foreign to a river at its source, no one can look upon wool scouring liquors such as those delineated in the foregoing analyses and consider them anything but totally unfit to travel in streams openly through thickly populated districts.

The recovery of grease is a simple process, and should be easily understood after the remarks at the beginning of this chapter.

Briefly, it consists in setting free the fatty acids of the soda or potash soaps by the addition of a second free acid (such as sulphuric or hydrochloric) having a greater affinity for the soda or potash bases than have the fatty acids in question. The fatty acids rising to the surface lift with them the emulsified unsaponifiable fats. The whole of the grease can be recovered in this way if a thorough admixture of the acid is brought about. Without this, however, it cannot be done. Recently, proper mixing or agitating appliances have been generally adopted with better results, but where the old fashioned 'go as you please' methods are still in vogue much of the grease is unrecovered.

The results of this treatment in its early days, or at any rate thirty years ago, are shown in the table on page 79 from the third report of the Rivers Pollution Commissioners, vol. i. p. xxxii.

The decomposition of the soaps can of course be brought about in other ways than by the addition of free acids; in fact, the bases can be supplanted by oxides of the cheaper alkaline earths or by the oxides of the metals.

The use of iron liquors was first suggested by the Pollution Commissioners, but, like many more of their valuable suggestions, was shirked

* Vol. i. p. xxxi.

	Mineral Grains per gallon.		Organic Grains per gallon.		Total Grains per gallon.		Grease Grains per gallon.		Grease separated.	Percentage of Grease separated.	Percentage of Grease lost.
	Before.	After.	Before.	After.	Before.	After.	Before.	After.			
Greenwood and Hansons, .	530·32	304·50	1204·21	282·80	1734·53	587·3	1099·56	193·76	905·8	82·4	17·6
Broadbent, .	103·27	233·30	261·43	284·62	364·70	507·92	220·64	176·96	43·68	19·8	80·2
Schofield, . .	122·50	220·85	430·36	318·71	552·86	539·56	365·23	61·60	303·63	83·4	16·6
Mellor, . .	215·25	248·25	906·85	791·35	1122·10	1034·6	790·20	393·85	396·35	50·2	49·8
Shaw, . . .	82·32	185·5	436·24	387·80	518·56	573·3	397·74	271·74	126·00	31·8	68·2

by rule-of-thumb manufacturers until circumstances compelled its fair consideration and trial upon scientific bases and ensured its adoption.

The extract following from the Commissioners' report had been published twenty years before the one below it appeared in the *Journal of the Society of Dyers and Colorists*:—

"The use of salts of iron for cleansing the soap suds might prove equally beneficial. Perchloride of iron in solution, added to the soap waters, produces a ready separation of the fatty matters and a clear liquor for discharge. Sulphate of iron or 'green copperas,' which is largely used in the dyeing of black goods, is also available for this purpose. The iron soap produced would be subsequently decomposed by sulphuric acid and the iron recovered as sulphate of iron for further use.

"It might indeed be practicable, where black dyeing is carried on, to employ the dye water as a means of coagulating the soap suds and separating the oil and grease; or if this should not answer, on account of the solid black matter of the dye interfering with the subsequent extraction of the oil, or injuring it in any way, the liquid of the dye waste filtered without the addition of lime, and therefore containing, as we have shown, much sulphate of iron in solution, might be employed with advantage."

Concerning the treatment of soap liquors in silk mills, G. Gianoli* describes a method which, "during four years, has given very good results, and which may be applied by every silk dyer without any additional plant. The liquors, when still at a temperature of 70° to 80°, are allowed to run from the dye baths into brick reservoirs, when they are brought into contact with an acidulated copperas solution. The effect of this is that the free alkalies are saturated by the acid, while the soap, in the presence of the sulphate of iron, is transformed into an iron soap. A mixture of free acid and iron soap, including other impurities, such as albuminous substances removed from the silk, then floats to the surface of

* G. Gianoli, *L'Industria* (through *Farberei-Muster Zeitung*), p. 128, *Journal of the Society of Dyers and Colorists*, No. 8, vol. iii., August 1887.

the liquid. After the water has been drawn off, this mixture is brought into lead-lined vessels, and there heated with sulphuric acid under pressures of ½ to ¾ of an atmosphere. The concentration of the sulphuric acid employed depends entirely upon the amount of water in the mixture. If the latter has the consistency of a paste, the author employs an acid of 54° to 64° Twaddell, in the proportion of 15 per cent. of the weight of the mass under treatment; if the mixture is air-dry, he takes an acid of 41° Tw. The fatty acids set free are perfectly pure, can immediately be saponified, and under this form be used again as soap in dyeing; while the liquid containing sulphate of iron can again be employed for the transformation of the soap-bath waste liquors."

The reasons to be adduced for the rare adoption of iron compounds for grease recovery are probably, first and foremost, the greater expense compared with common vitriol and the duplication of labour. The former of these objections should not really influence the operation, since the continual recovery of the iron would bring the actual cost of reagents to the same amount in both cases except for the very small capital sunk in stock iron. But in low-grade work of this description, especially in years gone by when both home and foreign competition was less keen, the comparative cost of chemical reagents and labour was taken into account not only for what was used, but for what was wasted; and the quantity of reagent to be written down under the last heading is not inconsiderable where scouring liquors are run into earth pits with permeable sides and bottoms and the only mixing appliance a long wooden shovel in the hands of an old and perhaps partially disabled man, whose idea of mixing, together with his physical incapacity, results only in a little splashing of the scouring liquors over the pit sides—maybe into the river close handy.

Again, the grease recovered with acid may be taken straight to the hot presses, whereas that recovered as metallic or lime soaps must needs be decomposed by acid—which of course means time and extra plant in addition to labour as before.

On the other hand, the resulting liquors after recovery by lime or iron are much more free from suspended matter, and in case of the decomposing agent being in excess (as it nearly always is), can be used as precipitating liquids for the general waste liquors in bulk.

At the same time it must be admitted that where acid is used for the decomposition of suds and thorough and systematic mixing is resorted to, very clear mother liquors can be obtained. Where the mother liquors are submitted to further treatment, in any event the decomposing agent is of less importance.

Chloride of lime has been used in exactly the same manner as the Rivers Pollution Commissioners recommended iron salts to be used.

H. Fleck,* speaking of the employment of the latter, says:—

"The wool-washing water thus produced contains, besides the materials added for the purification of the wool, firstly, those matters separated by the process of purification, and then, of least importance so far as quantity is concerned, the natural constituents of the water used for washing.

"Such a water as it reached here for examination was a greenish-brown, completely opaque liquid, with a pronounced smell of urine. A litre of it contained 48·500 grammes of solid matter.

"Of this there were 39·78 grammes organic matter and ammoniacal salts, and 10·500 grammes mineral matter, including 2·008 suspended mineral.

"According to their physical appearance the matters present in the water were divided into dissolved and suspended matters, which in one litre of the fluid were estimated as follows:—

"Dissolved solids:—

38·773	grammes organic matter.
1·009	bicarbonate of ammonia.
·925	sodium chloride.
1·352	sodium sulphate.
·499	sodium silicate.
·546	sodium carbonate.
3·386	potash in combination with fat.
46·490	

"Suspended solids:—

·373	iron sulphide.
·952	calcium carbonate.
·245	silicate of alumina.
·438	phosphate of ammonia and magnesia.
2·008	

"The 38·773 grammes of organic matter found in a litre of the wash-water contained 34·645 grammes of fat combined with potash. The presence of both carbonate and phosphate of ammonium suggests the use of stale urine as well as of potash soaps for scouring.

"It has recently been tried to recover the fats in these scouring waters for utilisation. By this a sort of purification is brought about, and it might be interesting to cast a glance at the nature of a wool-washing water thus purified in order to see the importance of this process from a rivers pollution point of view.

"The mode of purification consists in adding to the liquors solutions of chloride of lime or chloride of magnesia, or Epsom salts, whereby a soap of

* Ueber Flussverunreinigungen im Jahresberichte (12, 13) Königl. chem. Centralstelle im Dresden, 1884.

lime or magnesia is formed and separates out, so getting rid of the larger part of the organic matter.

"The resulting liquid after this treatment was of the colour of yellow wine with a slight milky turbidity, alkaline reaction, and possessed the urinary smell of the original liquor.

"A litre of it contained 12·724 grammes dissolved solids, which after incineration left 10·302 grammes of ash.

"Since the unpurified wool-wash as characterised above contained 10·500 grammes of mineral matter, it will be seen that the quantity of this has not actually been altered by the process of purification described, but the composition only of the constituents changed.

"One litre of the purified wool-wash contained :

	Grammes.
Sebacic acid,	0·787
Free ammonia, } combined with sebacic acid above,	·032
Potash, }	·417
Ammonia,	·157
Organic matter (neutral and liable to decompose),	2·387
Calcium sulphate,	·764
Magnesium sulphate,	·243
Sodium chloride,	2·537
Sodium silicate,	·037
Sodium sulphate,	2·792
Potassium sulphate,	3·386

"From the above results of chemical examination it follows, as shown by the quantities of sulphates of the alkalies present, that a solution of magnesium sulphate had been used for the decomposition of the soaps, and that the purification of the wool-washing water was only a relative success, since the soap solutions present initially were in a measure present finally; the fatty acids were only displaced by equivalent quantities of sulphuric acid.

"No change had been brought about in the organic matter as evidenced by the smell of stale urine.

"Turned into natural streams this purified scouring water will, it is true, cause neither colour nor turbidity, but for the rest it is just as much a scource of pollution as the raw scouring water."

The processes of cleansing wool may be divided roughly into—

1. *Steeping.*
2. *Scouring or washing.*
3. *Rinsing.*

With regard to the first of these processes the effect is the taking away in solution of soluble soaps and carbonate of potash.* The potash so taken

* "The Decomposition of Suint Water." A. Buisine, *Chem. Zeitung*, No. 34, 1886, p. 2; *Journal of the Society of Dyers and Colorists*, No. 1, vol. iii., January 1887.

away can easily be recovered by evaporating the steeping liquors and incinerating the residue.

The following are two analyses of yolk-ash by Marcker and Schulz:—

Potash,	58·94 per cent.	63·45 per cent.
Soda,	2·76	trace
Lime,	2·44	2·19
Magnesia,	1·07	0·85
Ferric oxide,	trace	trace
Chlorine,	4·25	3·83
Sulphuric acid,	3·13	3·20
Phosphoric acid,	0·73	0·70
Silicic acid,	1·39	0·07
Carbonic acid,	25·79	25·34

"The potassium carbonate present in suint is found in very changeable amounts, according to its age and concentration, etc. The suint favours, when left alone, the production of various microscopic organisms, without the existing compounds in the liquid undergoing essential change. However, the last product of this fermentation, which comprises several phases, is potassium carbonate formed with other bodies, at the expense of the organic salts of the suint. The first change, which is effected by the exclusion of the air, is over in a few days, and is the main cause of the formation of potassium salts with the volatile acids and carbonic acid. At the same time the urea it contains decomposes into ammonium carbonate and the hippuric acid dissociates into glycocol and benzoic acid. By the admission of air a further energetic decomposing action takes place by which the organic acids are completely turned to water and carbonic acid, leaving a potassium compound. The volatile acids, such as lactic acid and oxalic acid, next disappear, whilst the higher fatty acids and the nitrogen compounds are slowly decomposed. The benzoic acid appears to be unchanged. The only gas developed is carbonic acid." *

Yolk-ash consists essentially, therefore, of potash salts, principally carbonates, the carbonic acid arising mainly from the burning of the organic constituents of the yolk.

Maumene and Rogelet give the following analysis, which closely agrees with the above:—

Potassium carbonate,	86·78 per cent.
Potassium chloride,	6·18 ,,
Potassium sulphate,	2·83 ,,
SiO_2, P_2O_5, CaO, MgO, Al_2O_3, Fe_2O_3, Mn_2O_3, CuO,	4·21 ,,
	100·00 ,,

Any of the forms of evaporators used by paper makers for the recovery of soda would do for this purpose (the recovery of potash), and experience points to the potash as being well worthy of recovery.

* *Bull. Soc. Chem.*, 1886, xlvi. 497.

According to M. Chandelon, 1000 kilos. of raw wool will furnish 313 litres of yolk solution of spec. grav. 1·25 (50° Tw.), having a value of 15s. 6d., while the cost of extraction does not exceed 2s. 6d.

"Another mode of utilising yolk is that recommended by Havrez, according to whom it is the natural raw material for the manufacture of yellow prussiate of potash. The ordinary method of making this salt is to heat a mixture of crude carbonate of potash, waste animal matter (dried blood, leather clippings, etc.), and iron filings. The resulting fused mass is extracted with water, and on evaporating the solution the desired salt is obtained.

"Havrez says that when yolk is submitted to dry distillation it yields a residue which is an extremely intimate mixture of carbonate of potash and nitrogenous carbon. This residual coke contains, therefore, just the necessary elements for the production * of yellow prussiate of potash, and experiment has shown that it gives even a greater yield than the ordinary mixture, containing an equal amount of K_2CO_3, because of the perfect and intimate mixture of the various ingredients.

"Havrez has calculated that the money value of the yolk, when used for the production of yellow prussiate of potash, is more than twice that of its ordinary commercial value. He further maintains that when it is used for the simultaneous production of carbonate of potash and yellow prussiate of potash, instead of the former only, there is a gain in value of 50 per cent. For this purpose the dried yolk is mixed with an equal weight of waste animal matter, and heated somewhat longer than usual. Experiment showed that carbonate of potash obtained from 100 kilograms of the residual melt was accompanied by 17·3 kilograms of potassium cyanide, which was capable of yielding 19 kilograms of yellow prussiate of potash, valued at about £1, 16s. 9d." †

"In France and Belgium, and in a few exceptional cases in England, notably at the Alston Works, Bradford, it is the practice to extract the potash from wool before commencing the process of scouring, with soap.

"The latest type of machine for the extraction of potash from wool is the invention of M. Richard-Lagerie, of Roubaix. It requires very little attention, as most of the work is done automatically.

"The machine consists of three iron bowls on wheels, each capable of holding 2 cwts. of wool. On a slightly raised platform adjoining the bowls are fixed two tanks, each divided into six longitudinal compartments. The dimensions of each of the two tanks are 5 feet 3 inches long by 3 feet 3 inches wide. There is a distributing wheel to each tank, which distributes automatically—by means of a metallic hydrometer—the liquor as it is pumped up, into one or other of the six compartments according to its strength or density.

[* When mixed with iron filings.] † Hummel's *Dyeing of Textile Fabrics*, p. 41.

"Immediately the wool is placed in the bowl the workman starts the machine, and the liquor from the first compartment, which is the strongest, is discharged very evenly over it, and as soon as it is emptied the floating valve in the second compartment is liberated automatically, and its contents distributed over the wool in the same manner. As each compartment is emptied, the floating valve of the adjoining compartment is opened, the liquor becoming gradually weaker until the sixth compartment is reached, containing clear water for rinsing.

"A pump with a short length of suction pipe is attached to the underside of each waggon or bowl of wool, and the liquor containing the potassium salts is drawn off, and forced up for re-distribution into the tanks for re-use, until it becomes sufficiently strong to indicate 10° Baumé, when the current of liquid becomes diverted automatically, and flows away in pipes to the potash furnaces, where it is evaporated and calcined into carbonate of potash.

"The operation takes from fifteen to twenty minutes, so that each machine is capable of dealing with about eight tons of wool per 24 hours.

"Each set of wash bowls would require one of these machines, and seven of them would supply sufficient liquor, to keep one furnace going. It is confidently stated that if kept working for six days at 24 hours per day, the amount of carbonate of potash recovered would be from 10 to 17 tons, having a value, at present, of £12 per ton.

"These furnaces are said to burn 1 cwt. of fuel for every cwt. of potash produced.

"An analysis of the potash gives—

75	per cent.	carbonate of potash.	5	per cent.	earthy matters.
6	,,	sulphate of potash.	3	,,	water.
6	,,	chloride of potash.	1	,,	loss or waste.
4	,,	carbonate of soda.			

"The process of extracting potash from the wool before scouring is carried on in a very complete manner by Messrs Holden & Sons, at Alston Works, Bradford.

"Potash extraction has been carried on to a large extent in France, Belgium, and to a smaller extent in Germany and Russia, but hitherto English firms have, as a rule, given little or no attention to it, some of them contending that the soluble portion of the grease rendered material assistance in wool-scouring operations.

"There is evidently some truth in this contention, although the French patentees claim that less soap is necessary for scouring the wool after the potash has been extracted than when it is left in.

"But granting that a portion of the soluble fatty matter is lost by reason

of carrying out the potash extraction process, it is far outweighed by the greater value of the potassium carbonate which is recovered."

Two systems of grease recovery are also described in reports of a later deputation of the Bradford City Council, 1894, though neither of them seem to have met with much favour yet.

The first will probably suffer from the expense of evaporation, and the second requires the addition of a little acid to obtain first-class results. This addition, of course, brings it into the category of the first mentioned process, common cracking, the reduction in quantity of acid used being about counterbalanced by the extra mechanical power required :—

"*Treatment and Disposal of Suds from Wool-washing, at the Works of Messrs Thomas Biggart & Co., Ltd., at Dalry, Ayrshire.*

"At these works a process is in operation for the treatment of the suds produced in the scouring of wool. The scouring is done by means of the usual mechanical appliances, and potash soaps only are used. The object of the treatment of the suds is the recovery of the grease and potash as marketable commodities, and this is accomplished in a simple and inexpensive manner. The suds from the first bowl, which are said to contain about nine-tenths of the total quantity of grease and potash, are run into a rectangular brick tank, in which they are allowed to stand about twelve hours to deposit sand, etc. From this tank the suds are transferred to an evaporating pan, which is constructed with the view of fully utilising the heat produced in a furnace placed underneath.

"The evaporation is continued until the liquid becomes of the consistency of a syrup, and it is then run on to shallow iron trays or dishes to cool. In cooling, the grease collects at the top, and is removed at intervals.

"The remaining semi-liquid, which contains the potash, as well as a large quantity of organic matter other than grease, is run into the brick oven or calcining chamber, which is placed alongside the ordinary fuel furnace, where it readily ignites and assists in supplying the heat required to evaporate a further quantity of suds. In the act of burning, the carbonaceous matter not only furnishes the heat above described, but also effects a very important chemical action upon the alkali: namely, that of carbonating it, thus producing a crude carbonate of potash, which remains on the bars in the calcining chamber.

"The crude potash is then gathered in a heap and allowed to become completely carbonated, after which it is placed in a suitable tank through which water is run, and the whole boiled with open steam, so as to dissolve out the potash salt. The solution, after settling, is run into a cylindrical pan

and concentrated to 100° Twaddell at 212° F., the sulphate and chloride of potassium crystallising out on cooling.

"The liquor is stored until enough is collected for calcination, which is done in a special brick oven heated by coke, the product being a white and fairly pure carbonate of potash which sells at about £16, 10s. per ton, or it can be used in the liquid state by sending it back to the wool-washing machine for scouring purposes.

"The grease is boiled with vitriol and may be sold at about £6 per ton, or purified further.

"The whole operation is simple and inexpensive, and requires little room or plant. Moreover, it can be conducted without creating a nuisance, and is designed to prevent one. Last, but not least, it is said to be workable at a profit.

"Quantity of suds dealt with per week, 6000 to 7000 gallons, from which is obtained about 7 cwts. of grease per week at £6 per ton; 10 cwts. of potash per week at £16, 10s. per ton; 2 cwts. salts (sulphates and chloride of potash) per week at £7 per ton. About 4 tons of fuel are used in evaporating the above quantity of suds."

"*Report on Treatment and Disposal of Suds from Wool-washing, at the Works of Messrs Alfred Motte & Co., Roubaix, France.**

"The grease is extracted from the suds by a mechanical process of battage or beating, according to the new patent of Messrs Motte & Co., without the aid of sulphuric acid or other chemicals.

"The water from the wool-washing is conveyed by pipes from the wool-washing bowls into storage tanks, from which it is pumped into a very long but narrow wood tank about 150 feet in length and 6 feet 6 inches in width, the latter being divided into twenty-five compartments; each compartment is again divided into two, the smaller one about 2 feet 9 inches long by the full width of the tank, viz., 6 feet 6 inches, containing the agitator or beater, and the larger one, about 3 feet 3 inches in length, by the full width of the tank, containing the scraper for skimming off the froth which rises to the surface from the beating process, into longitudinal channels which exist on each side of the long wood tank.

"Each agitator, by beating the water, raises a froth which carries to the surface in its globules the insoluble fats contained therein. This greasy lather is skimmed off as fast as produced into the side conduits by means of a mechanical scraper working slowly to and fro from side to side in each compartment.

"The rate of flow of the suds water passing through the long tank can be

* Report, *cf.* p. 86.

regulated by means of a simple sluice board which is fixed transversely across every compartment, and which can be raised or lowered to accelerate or impede the flow as desired.

"The sud water when passed through the entire series of twenty-five compartments flows at a fairly rapid rate, but the same sud water might be passed through a shorter tank containing some eight or ten compartments, provided the rate of flow is reduced proportionately.

"Each beater is about 2 feet in diameter and 6 feet in length, formed mainly of woodwork, except the axle and prongs, which are of iron.

"The prongs, which are 6 inches long, are made of strong iron wire nearly $\frac{3}{16}$ of an inch thick, and are fixed $\frac{3}{4}$ of a inch apart. The axle of each beater carries a pulley worked by belting, and makes 80 revolutions per minute.

"The greasy lather, after having been separated by the agitators and skimmed off into the side conduits, is forced up through pipes by means of steam exhaust extractors (Giffard's method) into a series of wooden tanks or cisterns, which are raised some 4 feet above the floor level.

"These tanks are eleven in number, each 11 feet by 5 feet by 3 feet 9 inches deep, and they are ranged in a parallel line opposite the long tank where the beating process is carried on, there being a narrow footway about 8 feet wide separating them.

"The greasy matter, on reaching the wooden tanks, is heated to 60° C., or 140° F., and 1 kilogramme (or 2·2 lbs.) of sulphuric acid is added per cubic metre or 220 gallons of the grease laden product, in order to clarify and separate it from the water carried with it, which is 5 per cent. of the total sud water treated.

"After the grease is separated the acidulated water is decanted off and made use of to assist in clarifying the water which has undergone the battage treatment. The magma remaining is then passed by gravitation into open filters formed with rough canvas bags fixed on wooden frames.

"These filters, eleven in number, each 20 feet long by about 4 feet wide, allow the liquid to drain through the canvas, leaving the magma behind in a pasty condition, from whence it is placed in small canvas wraps, made into small parcels and placed in screw presses. The latter, eleven in number, are placed in a parallel line opposite the eleven canvas filters, only a narrow pathway dividing them.

"The expressed grease is conveyed into a receiver, and from thence into the clarifying tank, where a little sulphuric acid—1 kilogramme of acid to 100 kilogrammes of grease—is added for clarification. This acid finally settles to the bottom and can be again utilised. The pressed cake is disposed of as manure.

"Three qualities of grease are made, the best quality being obtained from the skimmings of the first series of eight compartments where the

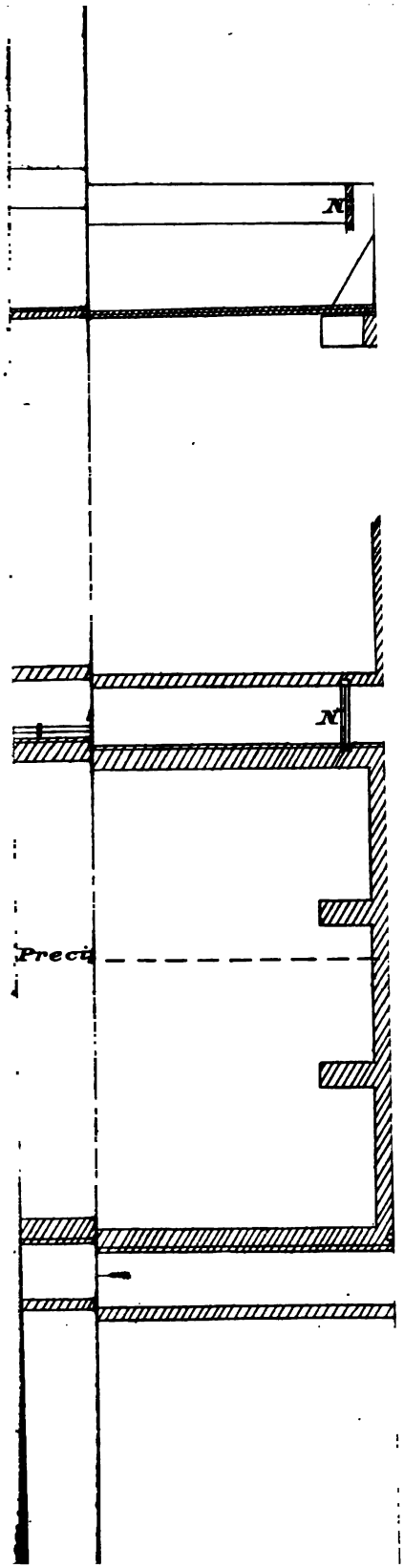
N
N
Preci

beating process is carried on, the second quality of grease being obtained from the skimmings of the next eight compartments, and the third quality from the remainder; the best quality of grease has a light brown colour, the second quality of grease has a brown colour, and the third quality of grease has a dark brown colour.

"After the battage treatment, it is at present the custom at Messrs Motte & Co.'s establishment to allow the water to flow into the sewer without further treatment, but when desired, it can be run into settling tanks where the sediment deposits in about an hour, leaving the water somewhat turbid and yellowish in colour. This deposit is only 2 per cent. of the volume of water, although it contains 75 per cent. of the total solids. It carries with it 60 per cent. of grease in the dry state, which is about one-tenth of the total grease.

"In order to render the effluent perfectly clear, it is necessary to use lime water in the proportion of 1 kilogramme to 1 cubic metre (or 220 gallons) of water, and subsequently the 5 per cent. of acidulated water decanted off from the wood settling tanks is added to complete the clarification."

The usual methods of utilising the recovered grease vary but little, and a detailed description of the whole plant at a woollen mill where it is fairly claimed that the best known reasonable practicable means were adopted (1894) will now be given.

The mill in question is that of Messrs C. H. Fox Bros., Wellington, Somerset (figs. 66 and 66B).

The whole of the liquors, including the mother liquor from grease cracking, are delivered into settling tanks at inlet M, and continuously over cills G, E, C, out at B and away *via* channel J, L, N, or quiescently treated by means of hand valves B, D, F, and separate cills. The top water is lifted by suction pipe T, from stand pipes or manholes R, and the sludge afterwards by suction pipe in Q on to main S from same pump.

Sulphate of alumina is used as the precipitant, but no filters follow the tank treatment, and the sludge is run away wet on to cinder drainers, being afterwards carted on to land.

The liquors from the scouring of raw wool as well as those from the scouring of oiled cloth are conducted to separate pits for the purpose of acidification with vitriol. After being thoroughly mixed, a settlement of both undecomposed fats or waxes and fatty acids, together with intermingled adventitious matter, takes place, and the supernatant liquor is run off or lifted off by means of pumps for treatment along with dye liquors and other general liquors from the establishment. Samples of these liquors drawn were found to contain solids as follow in parts per 100,000:—

	Mineral.	Volatile.	Total.	Remarks.
Scouring from raw wool, .	480	1882	2362	Suspended and dissolved solids.
Scouring from oiled cloth, .	800	4570	5370	Suspended and dissolved solids.
Mixed scours, . . .	2290	3020	5310	Suspended and dissolved solids.
Supernatant liquor (after acidification of gross liquors),	434	204	638	No suspended matter present.

The mineral residues of the above samples were examined, after carbonising as far as possible at a low heat, and were found to have the following composition :—

	Raw wool scour.	Scouring from oiled cloth.	Mixed scours.	Supernatant liquor (after acidification of gross liquors).
Silica free and combined, .	19·58	4·94	6·04	4·81
Iron and alumina, . .	7·81	6·41	10·29	2·42
Lime, ...	2·26	9·92	1·89	3·47
Magnesia, ...	·72	·92	·48	·81
Sodium, ...	3·12	9·38	21·94	14·83
Potassium, ...	24·07	15·76	24·12	22·64
Sulphuric anhydride, . .	1·92	5·13	35·33	51·33
Chlorine, ...	3·91	4·54	·66	·33
CO_2, etc. from carbonates, etc., formed on ignition (by difference),	36·61	43·00		
	100·00	100·00	100·75	100·64

Examinations of the grease were made according to the method given by Lewkowitsch and Benedikt.*

About 20 grammes of the filtered fat were dissolved in alcoholic potash and saponified under pressure in a copper bottle. After remaining under pressure for about an hour with frequent shaking, the contents of the bottle were washed out with alcohol into a flask, 150 c.cs. of water added, boiled, allowed to cool, and about 30 c.cs. of 50 per cent. sulphuric acid added. The top layer consisted then of the total insoluble fatty acids and insoluble unsaponifiable matter mixed. A sparingly soluble quantity varying from 3 to 16 per cent. always went away with cold wash waters in spite of prolonged boiling, but this was not separately collected and examined further —though the deposit on standing was considerable, and easily collected.

Of the mixture (total free fats and unsaponifiable matter) about 2 or 3 grammes were dissolved in 50 c.cs. of methylated spirit saturated with

* *Oils, Fats, and Waxes*, p. 671.

DIAGRAM 12.

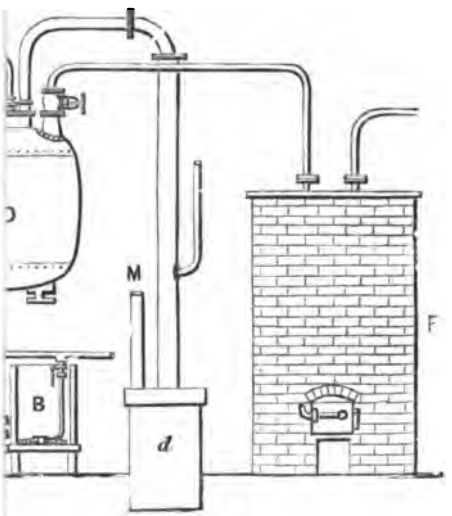

ch are drawn the acidified materials into the

ks containing the copper cooling coils.
t safety condenser, which prevents the possi-
nsed.
e.

[*To face page* 91.

very light benzoline (Wm. Mansbridge, *C. N.*, vol. lxv., No. 1699). 50 c.cs. of light benzoline were then added, and the solution, warmed, titrated with semi-normal alcoholic potash for total fatty acids.

The layers were then separated, and the spirit layer used for the separation of the total fat acids by mineral acid. These fat acids were dried and weighed and the mean molecular weight obtained by a second titration with potash, while the light benzoline layer was evaporated from the unsaponifiable matter, and the latter weighed.

The free fatty acids were titrated in a fresh sample of the crude mixture with semi-normal potash and phenol, but were not afterwards separated from the potash soaps formed. The differentiation of the free fats from the total would therefore be only approximately correct, being based on a uniform molecular weight, or on the relative quantities of potash for free and total fats, and is not given, but the total fats are from actual weighings.

In the following samples the combined fatty acids (based on the differentiation of free fatty acids by the potash required, and calculated on the mean molecular weight for what such a mean is worth) commence at about 11 per cent. in the grease from magma press and decrease gradually to nothing in the purified commercial oleine and stearine.

The volatile fats were estimated by the Reichert-Meissel method.

The expressed wool grease is submitted to distillation in the works in a retort as described in fig. 67, diag. 12; and a sample of it direct from the magma press gave results as follow:—

Volatile fatty acids,	·6 per cent.
Unsaponifiable matter,	20·5 ,,
Free and combined fatty acids,	65·8 ,,
Soluble in water after saponification under pressure and acidifying with mineral acid,	13·1 ,,
	100·0

Mean molecular weight, 364.

The expressed wool grease after purification with acid is placed in a still, steam-heated, and the distillation started.

The first portion of the distillate is a light oil known as spirit naphtha, a sample of which was found to have the following composition:—

Volatile fatty acids,	1·5 per cent.
Unsaponifiable matter,	36·2 ,,
Free and combined fatty acids,	57·7 ,,
Soluble in water after saponification under pressure and acidifying with mineral acid,	4·6 ,,
	100·0

Mean molecular weight, 267.

The next portion of the distillate, consisting of about 20 per cent., is known as green oil, and has the following composition :—

Volatile fatty acids,	1·6 per cent.
Unsaponifiable matter,	45·9 ,,
Free and combined fatty acids,	45·0 ,,
Soluble in water after saponification under pressure and acidifying with mineral acid,	7·5 ,,
	100·0

Mean molecular weight, 355.

This is followed by the third portion of the distillate, consisting of about 50 per cent., known technically as good grease, and was found to have the following composition :—

Volatile fatty acids,	·3 per cent.
Unsaponifiable matter,	32·0 ,,
Free and combined fatty acids,	57·4 ,,
Soluble in water after saponification under pressure and acidifying with mineral acid,	10·3 ,,
	100·0

Mean molecular weight, 286.

The next portion of the distillate, consisting of about 20 per cent., is known as brown oil, and gave the following figures :—

Volatile fatty acids,	·3 per cent.
Unsaponifiable matter,	62·3 ,,
Free and combined fatty acids,	34·8 ,,
Soluble in water after saponification under pressure and acidifying with mineral acid,	2·6 ,,
	100·0

Mean molecular weight, 336.

There now only remains in the still a black pitch, which is thrown away or used for any of the purposes to which pitch may be applied.

The portions known as green oil and brown oil are placed in the still again for re-distillation, while that known as good grease is allowed to 'seed' and is pressed for oleine, the seeded-out stearine being left behind. A sample of the oleine pressed out was found to have the following composition :—

Volatile fatty acids,	·3 per cent.
Unsaponifiable matter,	54·4 ,,
Free and combined fatty acids,	44·0 ,,
Soluble in water after saponification under pressure and acidifying with mineral acid,	1·3 ,,
	100·0

Mean molecular weight, 198.

The composition of the stearine after the expression of the oleine was found to be as follows:—

Volatile fatty acids,	3 per cent.
Unsaponifiable matter,	30·4 ,,
Free and combined fatty acids,	68·8 ,,
Soluble in water after saponification under pressure and acidifying with mineral acid,	·5 ,,
	100·0

Mean molecular weight, 267.

This is re-distilled, and a sample of the distillate drawn was afterwards found to give the following figures:—

Volatile fatty acids,	·3 per cent.
Unsaponifiable matter,	18·6 ,,
Free and combined fatty acids,	78·3 ,,
Soluble in water after saponification under pressure and acidifying with mineral acid,	2·8 ,,
	100·0

Mean molecular weight, 278.

The oleine is re-distilled also and a second seeding out allowed to proceed, resulting in a purified oleine and stearine.

The purified oleine and stearine were found to have the following composition:—

	Oleine.	Stearine.
Volatile fatty acids,	·2 per cent.	·07 per cent.
Unsaponifiable matter,	33·7 ,,	15·4 ,,
Free and combined fatty acids,	60·0 ,,	81·7 ,,
Soluble in water after saponification under pressure and acidifying with mineral acid,	6·1 ,,	2·83 ,,
	100·0	100·00
Mean molecular weight,	305	266

The purified stearine is used for making the commoner forms of grease, while the purified oleine is re-used for oiling wool before carding.

The distillation plant will be understood from the illustration and accompanying description.

A sample of raw wool before scouring was found to consist of—

Water,	17·5 per cent.
Fat (extracted with carbon tetrachloride),	21·9 ,,
Dirt and adventitious matter,	20·0 ,,
Wool,	40·6 ,,
	100·0

The fat extracted from the raw wool had the following composition :—

Volatile fatty acids,	4·3 per cent.
Unsaponifiable matter,	49·4 ,,
Free and combined fatty acids,	46·4 ,,
	100·1

Mean molecular weight, 268.

The composition of the cloth woven was :—

Moisture,	13·3 per cent.
Fat,	5·2 ,,
Wool and adventitious matter,	81·5 ,,
	100·00

The fat extracted from the cloth had the following composition :—

Volatile fatty acids,	10·1 per cent.
Unsaponifiable matter,	19·1 ,,
Free and combined fatty acids,	72·8 ,,
	102·0

Mean molecular weight total fatty acids, 353.

A process for the treatment of woolcombers' suds, very nearly similar to that of Messrs Mather & Platt for weak liquors generally, has been patented and has been in operation for some time at the works of Messrs W. Scaife & Co., Ltd., woolcombers, Laisterdyke.

The suds, after being run off from the washing bowl, are allowed to stand for about half an hour in a settling tank, very much like a wash-bowl, in the bottom of which is a system of pipes through which compressed air is forced. About 1 gallon of sulphuric acid to every 700 gallons of suds is added before the blowing begins. The violent aeration of the liquor which ensues quickly brings the grease to the surface in the form of a thick foam or froth, and a set of boards carried by an endless chain scrapes this off and carries it away over one end of the tank. The blowing is continued so long as any froth rises, which is said to be just so long as there is any grease left in the water. The foam, which contains only about 5 per cent. of water, is treated by pressure in a steam press. The liquor from which the grease has been extracted is treated with lime in the proportion of about 125–150 grains of slaked lime per gallon of acid water.

According to analyses made by Mr F. W. Richardson, the following are the results before and after treatment :—

	Crude Suds.	After Treatment.
Reaction,	Very alkaline.	Very alkaline.
Grains per gallon :—		
Total solid matters,	3150·0	509·6
Organic and volatile,	823·0	75·6
Grease,	1470·0	14·0
Mineral matters,	857·0	420·0
Alkali equal to grains of sulphuric acid (H_2SO_4) per gallon,	392	26·0
Composition of Mineral Matters :—		
Lime sulphate,	...	290·0
Lime carbonate,	44·8	...
Magnesia sulphate,	...	9·0
Magnesia carbonate,	10·6	...
Alkaline salts,	541·2	110·6
Oxides of iron and alumina,	78·4	8·4
Siliceous (sandy) matter,	182·0	2·0

The crude suds is very heavily charged with grease and impurities. The treated suds is a very satisfactory effluent; it contains only 14 grains of grease per gallon, and has been made alkaline with lime.

F. W. RICHARDSON.

Acid Sud-effluent from Messrs Scaife & Co.

This sample contained free acid equal to 40·0 grains of pure sulphuric acid per gallon.

Lime Treatment. Grains of slaked lime per gallon of effluent:	*Result.*
25, 50, 75	Very little separation. Quite insufficient amount of precipitant.
100	Better result; but supernatant liquor somewhat turbid after four days' standing.
125, 150	Complete separation and quite clear effluent. Sludge after four days' standing 12 and 14 per cent. respectively.

These experiments show that it is necessary to add nearly three times as much lime to get a clear effluent as is required to exactly neutralise the acid; but the resulting liquid is clear, contains very much less grease, and is much more acceptable. Cost of lime about £3, 10s. per million gallons of acid effluent.

F. W. RICHARDSON.

From a rivers pollution point of view one can hardly agree that the effluent containing 14 grains of grease per gallon is very satisfactory.

However, until a method of scouring wool by means of solvents has been perfected, this is a good method of treating woolcombers' suds with a small installation of plant if the effluent after acidification and aeration is neutralised and submitted to percolation through a filter of furnace ashes or other such material, as described in the chapter on Brewery, Tanning, and Distillery Wastes.

The most recent method of treating wool suds is that of the Wool Products Recovery Co., Bradford, covered by the patent of Messrs Smith & Leach.

The process is briefly one of—

(1) Concentration of the solids by means of evaporation under a vacuum.

(2) Separation of the fats, by means of a centrifugal separator, from the concentrated suds.

(3) Calcination of the liquor from which the fats have been abstracted, for the potash residue.

Mr J. Garfield, the engineer to the Bradford Sewage Committee, quotes the analyses referred to hereafter, which were made by the city analyst, Mr F. W. Richardson, F.I.C.

The evaporator used is a multiple effect, and is described in Chapter VIII., on Paper Works Refuse. The concentrated liquor contains only about 60 per cent. of water, the relative compositions of the original and concentrated suds being given by the patentees as follows:—

	Crude Suds.	Concentrated Suds.
Water,	95·83	63·26
Grease,	2·02	18·14
Organic impurities,	·96	7·93
Mineral matters—Alkaline salts, potash carbonate, etc.,	·87	6·56
Insoluble mineral matters, sand, alumina, etc.,	·32	4·11
	100·00	100·00
Alkalinity (sulphuric acid grains per gallon),	235·2	2744
The grease consists of—		
Unsaponifiable free fatty acids,	35·40	33·60
Saponifiable free fatty acids,	18·30	15·90
Combined as wool wax,	46·30	50·50
	100·00	100·00

When the crude suds have been concentrated to one-ninth of their bulk, the concentrated and viscid liquor is run into the separator.

This is a revolving drum, similar to a cream separator, and designed to

take advantage of the difference in the specific gravities of (1) the fats; (2) the potash liquor; (3) the solids (sand, etc.) in the suds. That of the wool

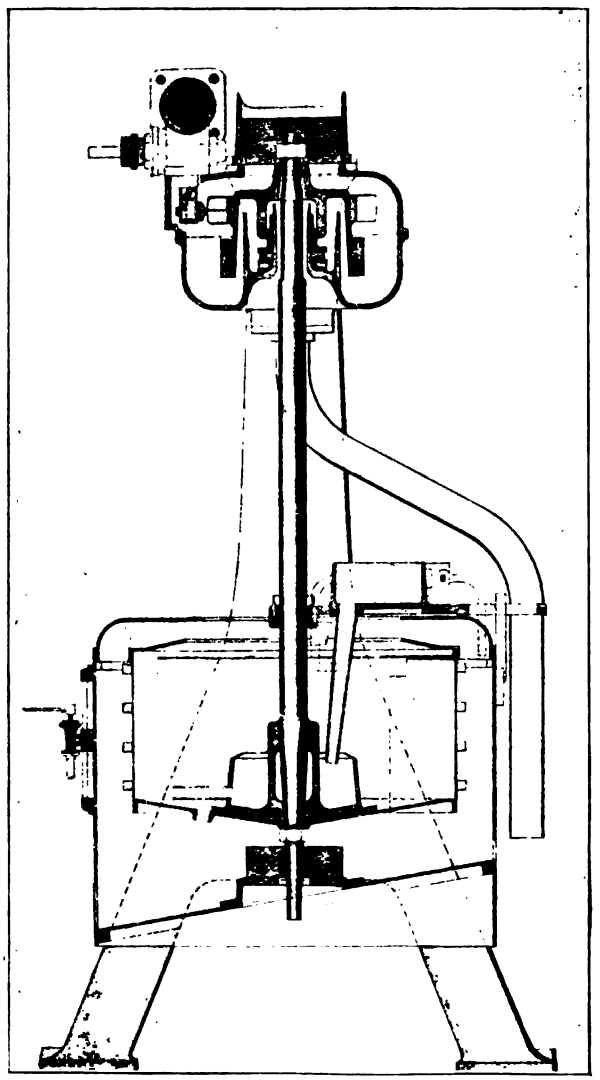

FIG. 68.—Wool Fat Separator.

fat itself is from ·916 to ·920; of the potash solution containing fine mud and soap, 1·200 to 1·300.

A very good type of machine is that patented by Messrs Fawcett,

Preston & Co. and Mr C. M. Matthey, and shown in the annexed figs. 68 and 69.

A drum, A, surrounding and attached to the lower end of a central spindle, B, receives the liquors to be separated, the top of the spindle being hemispherical, C, and seated in a hollow hemisphere, F, for bearing. Concentric with the surface of the hemisphere is a driving pulley, J, or pelton wheel. But when running, the rotatory motion of the spindle is accompanied by a gyroscopic motion of the drum, the course of the spindle

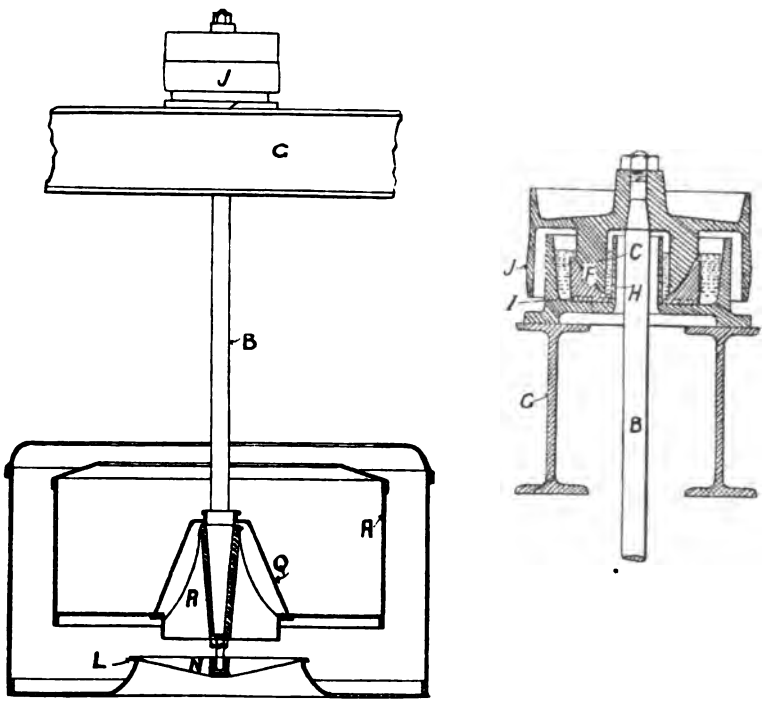

FIG. 69.—Messrs Fawcett, Preston & Co. and C. M. Matthey's Patent Separator or 'Centrifuger.'

forming a cone, with a greater or less base according as the centre of gravity is higher or lower.

To neutralise this, or to retard the precession, a drag weight, N, is placed on bearings, L, into which the bottom of the spindle protrudes. G is simply a girder support. H and I are oiling arrangements, Q and R discharging apertures.

When started, with the suds at a temperature of 212° F., the sand soon forms an outer layer, A, fig. 68, the fats an inner layer, and the potash liquor fills the space between. A flat annular plate is fixed horizontally over

the three vertical layers, a space of about two inches according to the size of machine being left for the accumulation of sand against the periphery of the drum. Beyond this space the potash liquor is discharged by means of an outlet until it becomes almost blocked by accumulated sand, when the machine is stopped. This takes, with average suds, about four hours.

The accumulated deposit of sand has the following composition :—

Moisture,	23·20
Grease,	9·60 (as soap)
Organic matter—	
Carbohydrates,	trace
Nitrogenous compounds,	1·64
Mineral matter—	
Iron and aluminium oxides,	7·13
Carbonate of lime,	3·60
Carbonate of magnesia,	trace
Alkaline salts,	trace
Phosphoric acid,	·01
Siliceous (sandy) matter,	54·82
	100·00
Containing nitrogen,	·184
Equal to ammonia,	·223

The wool fat is continually delivered, by means of an adjustable skimming device, through a pipe in the wall of the separator into a storage tank. It consists of about 95 per cent. grease; and if clarified by boiling up with water and allowing to settle, a percentage of 99 may be obtained.

The clarified and centrifuged grease is said by the patentees to have the following relative compositions :—

	Centrifuged Grease.	Clarified Grease.
Moisture,	4·00	·60
Unsaponifiable matter (Cholesterins),	42·60	44·60
Free fat,	mere trace	mere trace
Saponifiable (combined with the Cholesterins as 'wool wax'),	52·14	53·65
Insoluble matters—		
Organic,	·46	·75
Mineral,	·80	·40
	100·00	100·00
Total pure 'wool wax,'	94·74%	98·25%

The centrifuged grease is pure wool wax to the extent of $\frac{19}{20}$ths, and the clarified grease is of even superior quality. Its freedom from acids and from glycerine fats and oils, and its good viscosity, should make it an

excellent lubricant for cylinders, upon the metal of which it will exert no corrosive action.

The potash liquor, which naturally contains the added and undecomposed soap, is said to have yielded the following results on analysis :—

	The Liquor per cent. on the wet.	On the dry residue.
Water,	72·20	...
Potassium carbonate,	6·25	22·48
Sodium carbonate,	·13	·47
Potassium chloride,	·65	2·34
Potassium sulphate,	·70	2·52
*Grease,	6·72	24·17
Organic impurities,	6·62	23·81
Insoluble mineral matter,	6·73	24·21
	100·00	100·00
*Wool grease,	56	
Soap, oil and fats,	100	

This liquor is further concentrated in the evaporator and then run into a revolving furnace (fig. 70) for calcination. Considerable combustion of the contained fats takes place in the furnaces, where, by the way, ferroprussiate of potash might easily be made, the final ash having the composition :—

	Ex Casks.	Ex Furnace.
Moisture,	8·80	none
Potassium carbonate,	50·60	55·48
Sodium carbonate,	1·30	1·43
Potassium chloride,	4·75	5·21
Potassium sulphate,	5·55	6·08
Insoluble mineral matter (sand),	27·20	29·82
Carbonaceous matter,	1·80	1·98
	100·00	100·00
Total alkalinity expressed as potassium carbonate,	52·30%	57·34%

The condensing steam from the evaporator may be used advantageously for wool washing, since it contains practically nothing but a little grease carried over mechanically, the actual constituents being—

	Grains per gallon.
Ammonia,	5·35
Grease,	4·20
Alumina and trace of iron,	·40
Lime,	mere trace
Alkaline salts,	·80
Total non-volatile solids,	5·40
Total hardness,	none

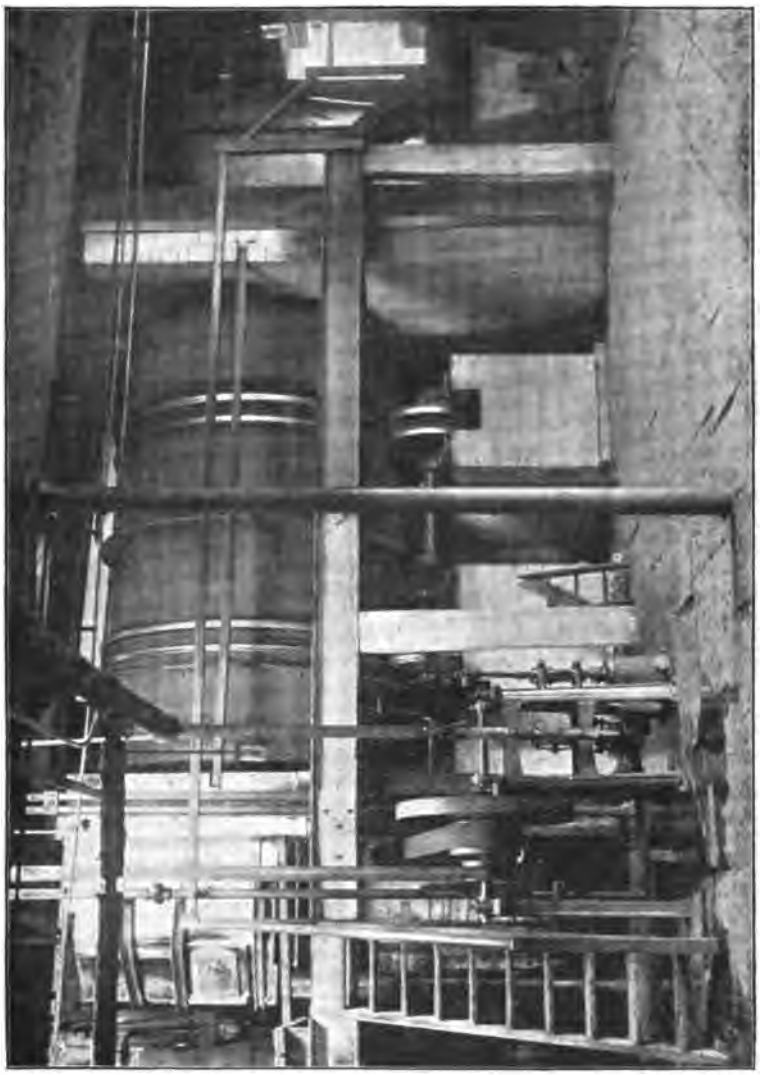

FIG. 70.—Grease Recovery. Revolving Gas Furnace for Ash Calcining.

Fig. 71 shows the complete installation at the Field Head Mill, Bradford.

Figures are not to hand concerning the actual cost of working the apparatus, but no doubt these will be considerable, considering the cost of—

(1) Evaporation of suds initially.
(2) Running of centrifugals.
(3) Secondary evaporation of potash liquors.
(4) Fuel and labour of calcination.

It is to be hoped, however, that the cost will not choke the process, for it is one which not only completely annihilates the possibility of rivers

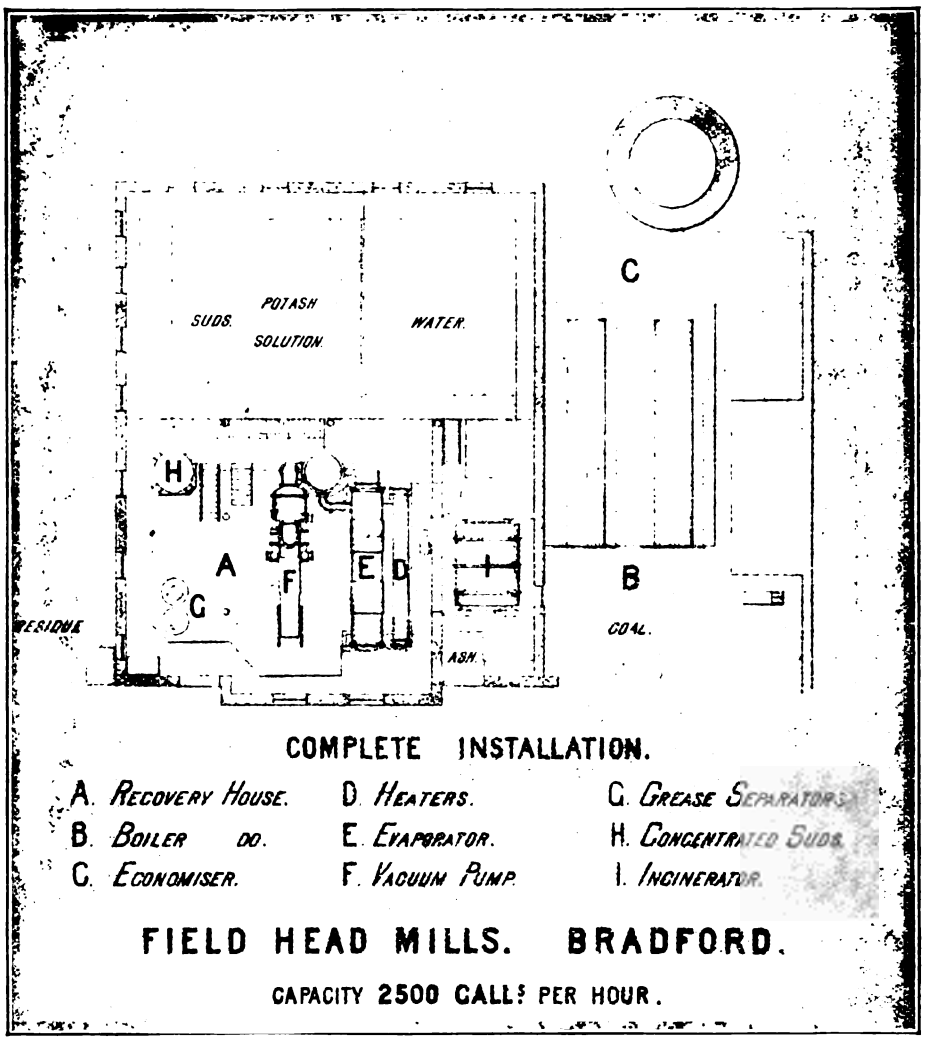

FIG. 71.

pollution, but in a scientific manner separates and yields as a valuable article each constituent of what has hitherto been objectionable waste.

The 'Kestner' evaporator referred to in Chapter VIII. is very suitable for evaporating suds down to the centrifugal separator stage.

Many attempts have been made to abstract the grease from the wool by means of solvents without resorting to scouring liquors. If this could be done a vast amount of both rivers pollution and expenditure would be prevented, as may be seen from the foregoing analyses.

The liquors remaining even after the 'cracking' of scouring liquors are considerable in volume and foul in character; in fact, the sewage at Bradford, owing to the admission of these liquors into the sewers, is rendered almost untreatable, and the condition of affairs is so interesting, that with the permission of Mr J. H. Cox, A.M.I.C.E., Borough Engineer, I take the liberty of extracting from a report he presented to the Corporation of Bradford in 1896, the following:—

"The daily volume of sewage in dry weather may be taken at 10 (now 12) million gallons. It varies frequently in strength throughout the twenty-four hours, but is always found to be distinctly alkaline.

"About one half of the above is domestic sewage and one half trade sewage. The quantity of the latter varies with the trade of the town, but on the average includes daily about 1½ million gallons of suds from wool-washing establishments, nearly 2 million gallons of dye-water from dye-works, and some 625,000 gallons of sewage from Messrs Lister & Co.'s Works at Manningham.

"It is estimated that over 3 million gallons, mainly dye-water, is discharged into the Becks, and does not therefore reach the sewage works.

"The dye-water is comparatively easy to deal with, by far the greatest difficulty being caused by the discharges from wool-washing establishments and Messrs Lister & Co.'s works.

"A large proportion of the night flow consists of wool-washing refuse, which is invariably much worse to treat than the day sewage.

"During Sunday and Sunday night in each week, the sewage is of a domestic character and is comparatively easy to treat.

"Professor Dewar, in his evidence given at the Local Government Inquiry in May 1894, stated that the wool-washing product was really by far the most serious element in the Bradford sewage, firstly because there was a very large quantity of solid matter in suspension which came from the crude material in the fleece; and secondly, from the fact that there was in it a large quantity of alkali, which was required to remove fatty matters. As they would be well aware, the fat of wool was of a very different character altogether from the ordinary fatty material. It was a substance which they knew in the purified state now as lanoline, and which had the remarkable property of adhesion to water. This caused very great difficulty in getting any mechanical separation of it from the sewage.

"It was not like ordinary fats, which would rise to the surface. If one had an alkaline liquor, and then neutralised it, ordinary fats would rise

rapidly as oil or solid materials, which one could then freely skim off; but this wool fat produced an emulsion, which took a long time to settle.

"Very minute globules were formed really in suspension, and these were exceedingly difficult to separate.

"Any colouring matters combined easily with the metallic oxides, but it was impossible to find anything with which this fatty material really combined. It was really carried down as a precipitate of a metallic oxide which was produced in the sewage, and it had a very deleterious effect with regard to the densification which was such an important part of the precipitation of the sludge; because this fatty material being simply of a low specific gravity, prevented the precipitate, which went on coagulating and getting denser in time, settling; and the result was that the character of the sludge was not nearly so dense as it otherwise would have been if it coagulated more quickly. Another fact in connection with this fatty matter, in its association with any precipitate, was, that when one came to the subsequent squeezing operations to consolidate the sludge it was much more difficult to get the water out, because in the ordinary process of precipitating with carbonate of lime or other materials one had to squeeze this divided fat with the other materials, and this prevented the water being expelled easily.

"In this way the whole character of the sewage was not only modified by this large amount of fatty matter, but its presence interfered with the character of the precipitation, and caused subsequent difficulties in connection with the removal of the sludge. The character of this sludge was therefore quite peculiar to the so-called sewage of Bradford, which was largely manufacturing products. As he had said, this material contained a very considerable quantity of the fatty matter, which might amount in the pure dry product to as much as 20 per cent.

"This was calculated upon the pure dry product, assuming nothing was added in the way of lime or loading.

"If one squeezed some of the Bradford sewage precipitate he would get as much as from 15 to 20 per cent. of fatty matter in the sludge.

"Briefly, then, the admixture of the suds with the ordinary sewage of the town causes great difficulty in its treatment.

"1st. It requires much larger quantities of chemicals than ordinary sewage to effect precipitation of the solids.

"2nd. The wool fat in the wool-washings on becoming mixed with the ordinary sewage seriously retards precipitation and leaves a bulky and light precipitate containing over 98 per cent. of water.

"The usual percentage of water in the wet sludge of other towns is 90; and it will be seen from the following table that the increase from 90 per cent. to 98 per cent. makes a vast difference in the total bulk of the sludge.

Wet sludge with 90 per cent. of water means 9 of water to 1 of solids;
" 95 " " 19 " 1 "
" 98 " " 49 " 1 "
therefore 100 tons of sludge with 90 per cent. of water
becomes 200 " 95 "
and 500 " 98 "

so that the watery character of the sludge causes its volume to be increased five times.

"3rd. The sludge, being so thin and greasy, is difficult to press, and after being pressed in the most improved sludge pressing machinery, fully 75 per cent. of water is left in the sludge cake.

"The exterior portion of the cake being very homogeneous, owing to the presence of the grease, prevents the free escape of water from the interior, consequently the sludge cake is larger in bulk, not very portable, and cannot be burnt unless previously dried at great additional expense.

"In many towns the pressed sludge cake contains only 50 per cent. of water; and if the Bradford sludge cake could be reduced from 75 per cent. of moisture to 50 per cent., it would reduce the amount of sludge cake by one half."

The following is a report on a sample of dry sludge received by Mr F. W. Richardson of Bradford, January 30, 1896:—

	Percentage results.
Water,	5·50
Grease,	25·00
Organic matter (non-nitrogenous)	24·76
* Nitrogenous compounds (albuminoids),	7·06
† Mineral matter,	37·68
	100·00
* Containing nitrogen,	1·12
Equal to ammonia,	1·36

† Consisting largely of oxide of iron.

This sludge contains an appreciable amount of organic nitrogen, and in its dried state has some manurial value. F. W. RICHARDSON.

N.B.—Moisture in above sludge before drying—76·26 per cent.

A further report, dated April 9, 1896, upon five samples of suds and effluents from Messrs Tankard, Scaife & Co., was as follows:—

	No. 1. Crude Suds.	No. 2. Suds after Skimming.	No. 3. Water after Settlement.	No. 4. Final Effluent.	No. 5. Skimmings.
Grains per gallon:—					
Total grease,	476	84	70	11·2	2268·0
Alkali equal to sulphuric acid (H_2SO_4),	70·0	...	...	...	...
Acid equal to sulphuric acid (H_2SO_4),	None	150	138·6	21·0	58·8

F. W. RICHARDSON.

The Bradford Corporation were successful in obtaining an Act of Parliament entitled "The Bradford Tramways and Improvement Act, 1897," which contained the following provisions:—

*Part VII.—Trade Refuse.**

45. It shall not be lawful for any person to cause or suffer any refuse from any manufactory or works that would interfere with the treatment or utilisation of the sewage of the city to flow or pass into any sewer of the Corporation, or to flow or pass into any drain, channel, or watercourse into any such sewer; and if any person is guilty of any act or omission in contravention of this section, he shall be liable to a penalty not exceeding twenty pounds, and in case of a continuing offence, to a further penalty not exceeding forty shillings for every day during which such offence continues after the expiration of a time to be determined in that behalf by the Court of Summary Jurisdiction before whom he is convicted; provided that any person charged with an offence against this section shall not be convicted thereof if he shows to the satisfaction of the Court of Summary Jurisdiction before whom he is charged, that he has duly used the best practicable and reasonably available means of depriving the refuse from his manufactory or work of qualities that would make it likely to interfere with the treatment or utilisation of the sewage of the city.

Provided also that any of the persons named in the first part of the schedule to this Act, who, within the month of June one thousand eight hundred and ninety-seven, had and exercised the rights to pass into any sewer of the Corporation or into any drain, channel, or watercourse communicating with any such sewer, any such refuse, shall not be convicted of an offence against this section unless it shall be proved by or on behalf of the Corporation that such person has received or refused the tender from the Corporation of compensation for being deprived of such right, such compensation being at the rate of eighteen pounds for each comb ordinarily used within the said month upon the premises from which such refuse was then discharged:

Provided also, that any of the persons referred to in the second part of the schedule to this Act, or the successors of any such person, who shall be charged with an offence against this section shall not be convicted thereof until a tender from the Corporation of compensation at the rate of eighteen pounds per comb for the number of combs mentioned in the second part of the schedule

* 60 & 61 Vic. c. cclx. Bradford Tramways and Improvement Act, 1897.

in connection with the premises referred to therein shall have been received or refused in respect of such premises:

In the event of any compensation being paid by the Corporation as aforesaid, the plant and apparatus erected after the passing of this Act for dealing with the trade refuse of the person to whom such compensation is paid, and upon which such compensation shall be expended, shall be deemed to be landlord's fixtures:

Provided also that no person shall be liable to conviction under the provisions of this section in respect of the uses of any of the premises mentioned in the schedule to this Act, if he shall show to the satisfaction of Court that he had not at the date of the alleged offence on those premises sufficient and suitable space available for the erection and use of plant and apparatus necessary to enable him to deal with his trade refuse so as to deprive it of qualities that would make it likely to interfere with the treatment or utilisation of the sewage of the city:

A person shall not be liable to a penalty for an offence against this section until the Corporation shall have given him notice of the provisions of this section, nor for an offence committed before the expiration of six months from the service of such notice, provided that the Corporation shall not be required to give the same person notice more than once.

46. The owners or occupiers of any dyeworks shall dig, make and construct pools or reservoirs within their own ground or as near their works as possible, for receiving and depositing the solid matter contained in the refuse of such works, before discharging such refuse directly or indirectly into any sewer of the Corporation.

This Act, however, does not seem to have been enforced to any extent, and up to the present, the attempts by the Corporation to acquire lands for outfall works have been futile, owing to opposition on the part of owners affected. The treatment proposed in the last Bill was precipitation, sludge pressing and bacterial filters, 1901. Even the sewage containing the wool grease is amenable to bacterial treatment, but from every point of view it is desirable that the manufacturers should deal with the grease in their own works.

They are not ready, however, to do this; simple cracking is certainly not profitable and yields an objectionable mother liquor. Scaife's process is only one stage removed, while the most satisfactory evaporation and separation by centrifugers, is, they claim, objectionable on account of installing and working cost. In fact, it has been urged by several that it is almost as costly as a solvent scouring machine which would do away with scouring liquors altogether and require less labour to run.

This view of the matter is so important that this chapter can hardly be closed without some reference to scouring machines, if *only historical.*

Solvent scouring is easy; the recovery of the solvent has not yet been mastered, but nearly all attempts are on the same lines, and involve the resort to a temperature of distillation which probably decomposes the fat itself and gives rise to new products, including some of the solvents.

One of the most important of the machines for cleansing wool by means of solvents was that patented by Messrs Singer & Judell and described by Mr Watson Smith.* I cannot do better than quote, with the permission of the author, the description of the process in the machine from this source:—

"We now approach another method, the one more specially interesting to us on this occasion, that of scouring with volatile liquids inert to the fibre. It possesses the essential advantage over the alkaline processes that the wool may be deprived completely of its wool fats without injury to the fibre. However, with all these methods, as so far employed, there are serious objections, either on the score of cost through loss of volatile agent, of modification of the fibre through the manner or under the condition in which the volatile solvent is employed, and through the danger attending the necessity in some stage of the process either for treatment of the fibre or recovery of the spent volatile scouring agent or the handling of the spent product by workpeople. However, I submit that difficulty and danger are no words to frighten or deter any British manufacturer or workman, when once it is granted that superior results are to be obtained by the use of given means and instruments. Look at our houses furnished with an illuminating agent—coal-gas, which, notwithstanding its purification, if let accidentally escape into our bedrooms, would certainly asphyxiate or poison us; and as if that were not sufficient, convert the atmosphere of our rooms into a dangerous explosive to boot. Note also the fact that the immense volumes of coal-gas supplied to our cities are safely collected and stored in capacious vessels of wrought boiler-plate, just as the laboratory student collects and preserves his oxygen or hydrogen in the pneumatic trough under an inverted bottle or tumbler.

"Do not imagine that I would palliate for a moment any admission of the vapours of bisulphide of carbon, for example, into the atmosphere of sheds or factories or anywhere where they could be breathed by workpeople. I know and have specially studied the poisonous action of carbon bisulphide vapours, and I say that slow poisoning by this agent is simply a terrible thing, involving loss of mind and disease of body combined. But I do not hesitate to say that if a method is offered in which the carbon bisulphide is treated as plant, is to act in the cold, is continually recovered and automatically returned, if it is one in which there is to be no removal of the fœtid oil-charged material from the apparatus in which it becomes oil- and grease-

* *Journal of the Society of Chemical Industry*, vol. viii. page 25.

charged, and if whilst, in a word, the products are discharged at their proper places the bisulphide simply circulates—then I would, on these *prima facie* grounds, throw in my adherence to such a method till I heard worse of it.

"Let us see what has been done so far with bisulphide of carbon. Several methods have been proposed, and one of the best of recent date is by T. J. Mullings. The wool is placed in a covered-in centrifugal machine, and submitted there to the cleansing action of the bisulphide in the cold. When once saturated with the yolk constituents soluble in CS_2, the machine is revolved to extract the chief bulk of it, and the remainder left in the fibre is expelled by water being admitted into the apparatus. Water being both lighter than and non-miscible with bisulphide, displaces the latter, which sinks to the bottom of the vessel. The action proceeding in the cold, Mullings claims, and rightly so, that the wool does not acquire the yellow tint invariably assumed when heat is used.

"The mixture of bisulphide and water is collected in a tank, and after settling, the former is run off below and recovered by distillation for using again. Hummel, who refers to the process in his *Dyeing of Textile Fibre*, says: 'It has been recently tried on a large scale, with a certain amount of success.'

"Now let us glance at a weak point or two in such a process as this. (1) In centrifugating the wool from the bisulphide containing these yolk constituents which are dissolved, a time will come when the wool with a minute quantity, but probably still some bisulphide left in it, must be exposed in order to withdraw it, for the admission of water will not remove absolutely all bisulphide. (2) Since the washing with bisulphide is not by cumulative system, the bisulphide drawn off for redistilling will not be fully charged with yolk constituents. (3) Either the dirt and insoluble matters remain amongst the wool or are driven out amongst the bisulphide, or both conditions obtain; this would in any case necessitate a cleaning out of the centrifugal apparatus, and would increase thus danger and expense.

"A modification of Deiss's apparatus for extracting oils from seeds has been proposed. It is a macerating apparatus, in which the wool is treated with warm vapours of bisulphide of carbon. The apparatus is ingenious, but it labours under this disadvantage, that the washing and treatment are cumulative. Thus the bisulphide in the bulk will not become saturated, and so proportionally larger volumes of this volatile agent must be used for keeping in circulation, per given quantity of wool, than would be the case if a cumulative system were employed.

"The annexed figure (fig. 71A) represents Deiss's apparatus, which is very much used on the Continent. A store-well contains the bisulphide of carbon (covered with a layer of water), and also acts as receiver for the bisulphide when recovered by distillation from the oil and bisulphide mixture which has reached the retort. By means of a pump, the bisulphide

is raised to the macerator, where it comes in contact with the seeds or other matters by a dry steam coil, the bisulphide vapours evolved being

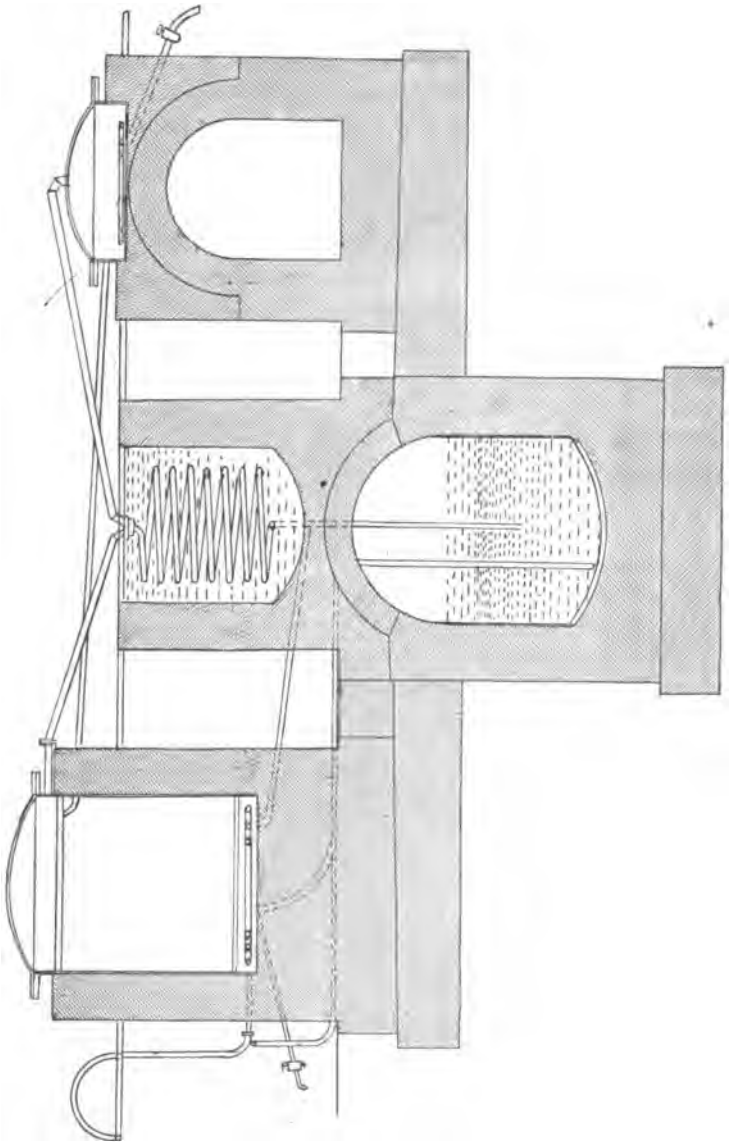

Fig. 71A.—Deiss's Apparatus for Oil Extraction.

caught and condensed in the worm, and so returned to stock in the well. When the extraction is ended, the seeds, etc., remain on the false bottom of the extractor or macerator whilst the oil-laden bisulphide is passed over to

the retort by the pipe shown at the upper part of the extractor where the specifically lightest layer, that richest in oil, is. In the retort it is heated by closed steam, bisulphide returned to stock, and oil remaining in the retort, to be afterwards drawn off. When the bisulphide of the first treatment is run to the retort, the seeds and macerator must receive a final treatment resulting in a dilute solution, which must then be treated in the retort.

"Not only Deiss's modified apparatus, but many others proposed, suffer from this defect, the force of which you will easily recognise when I compare it, as to its results, to the lixivation of a quantity of black ash or crude soda, all in one and the same black-ash vat. It would mean non-saturation, a lot of weak liquors, larger consumption of fuel, and increased labour.

"In many of the processes proposed, a great difficulty again has been the putting in of a charge of wool to an apparatus which must be opened for the purpose, and the withdrawal after washing, which is likely to be just as disagreeable and dangerous.

"Not the least of the difficulties is the treatment of the dirt and sand separated from the wool, and containing at least some little of the bisulphide. And now, last and not least—and I speak as an old manufacturer of carbon bisulphide—the difficulty of distilling the bisulphide from the oil completely and securely, and moreover of separating, as in the case of Mullings' apparatus, the oily bisulphide from the water with which it is mixed. To do all this safely and without loss, which would mean danger if but a very modest loss, involves the solution of practical problems of no ordinary magnitude.

"I think we now see that if an effective and safe apparatus is to be put into the hands of the wool-scourer, it must, in working, fulfil conditions something like the following:—It must consume as little bisulphide per given quantity of wool as possible—*i.e.* it must return nothing but a bisulphide as nearly saturated with yolk constituents as possible. The saturated solvent must proceed direct, and covered, to the still for regenerating from it the CS_2, and that carbon bisulphide must be condensed and pass again direct into the washing system. The still must be one that can work automatically like the rest of the apparatus, and work safely. It must deliver the oil, free from bisulphide, continuously and automatically as it is produced. Hence, and in other words, the carbon bisulphide must circulate through and around the entire system, including the recovery still, and drop the oil, so to say, on its way and at its proper place.

"But to this end the very dirt and sand deposited from the wool in the apparatus must also be automatically gathered up, and, what is more, it must be as automatically washed with bisulphide (fresh) and then be rid of all traces of carbon bisulphide, which must be returned to circulation in

the system, whilst the dirt and sand are automatically and continuously delivered at a specific and proper place.

"The washing with water should take place in the same apparatus, and the washing should also admit of the same continuous and cumulative action as with bisulphide. If possible, raw wool must be delivered into such apparatus at one place by some simple process that workmen will easily understand, and withdrawn at another, just as simply as the oil and grease are, and also the dirt and sand. Finally, no direct fire must be necessary anywhere near this apparatus, which may consequently be to a considerable extent isolated. I shall now describe such an apparatus to you. It is somewhat singular that seven months ago, being asked by a large woollen firm in Yorkshire to recommend to them a good wool-scouring process, and looking through a number of patents, I was at once struck by Singer & Judell's patent, No. 13,699, of October 10, 1887, recommended it, and then advised the London patent agent to write to Adelaide and invite the patentees either to come or send a representative. However, these gentlemen had also been smitten with the idea that they ought to visit the mother-country, and so the letter must have reached Adelaide a day or two after they had set sail. In coming they have brought improvements on the specification referred to of an important character.

"Let us now examine their apparatus and process, and see if it fulfils the conditions prefigured in the ideal structure already sketched.

"The raw wool is first deposited on an endless belt made of wire gauze (fig. 71B, also fig. 71C, diagram 13), down upon which comes another belt forming an upper cover to hold down the wool just as the belt enters the apparatus, which is a structure of iron, measuring, for an output of 50 to 60 bales per twenty-four hours, about 35 feet long. All lids, covers, etc., are securely luted in water. It will be observed that the top belt, as the washed wool emerges, becomes the bottom belt, bearing the fresh charge of raw wool as the double belt re-enters the apparatus. The double belt, bearing the raw wool clasped in it, now descends into the first of a series of cells or cisterns, which when the apparatus is in work is empty, and when out of work is filled with water to lute the edge of the cover of the apparatus dipping into it. Passing into this first cell the belt passes over one roller and under another at the lower part of the cell, and then rises under the cover-lid and passes between two squeezing rollers. The band with its wool now descends into the first carbon bisulphide vessel, and emerging, is squeezed between nipping rollers just before entering the second cell. Thus it travels through and is washed and squeezed in fourteen cells containing carbon bisulphide, when it enters five similar but deeper tanks containing water alone, in which it is also washed and squeezed (fig. 71B). The band with wool now ascends to a drying chamber, and in its upward course is supported and run upon two rollers. In this chamber it passes upwards and downwards over hollow rollers,

DIAGRAM 13.

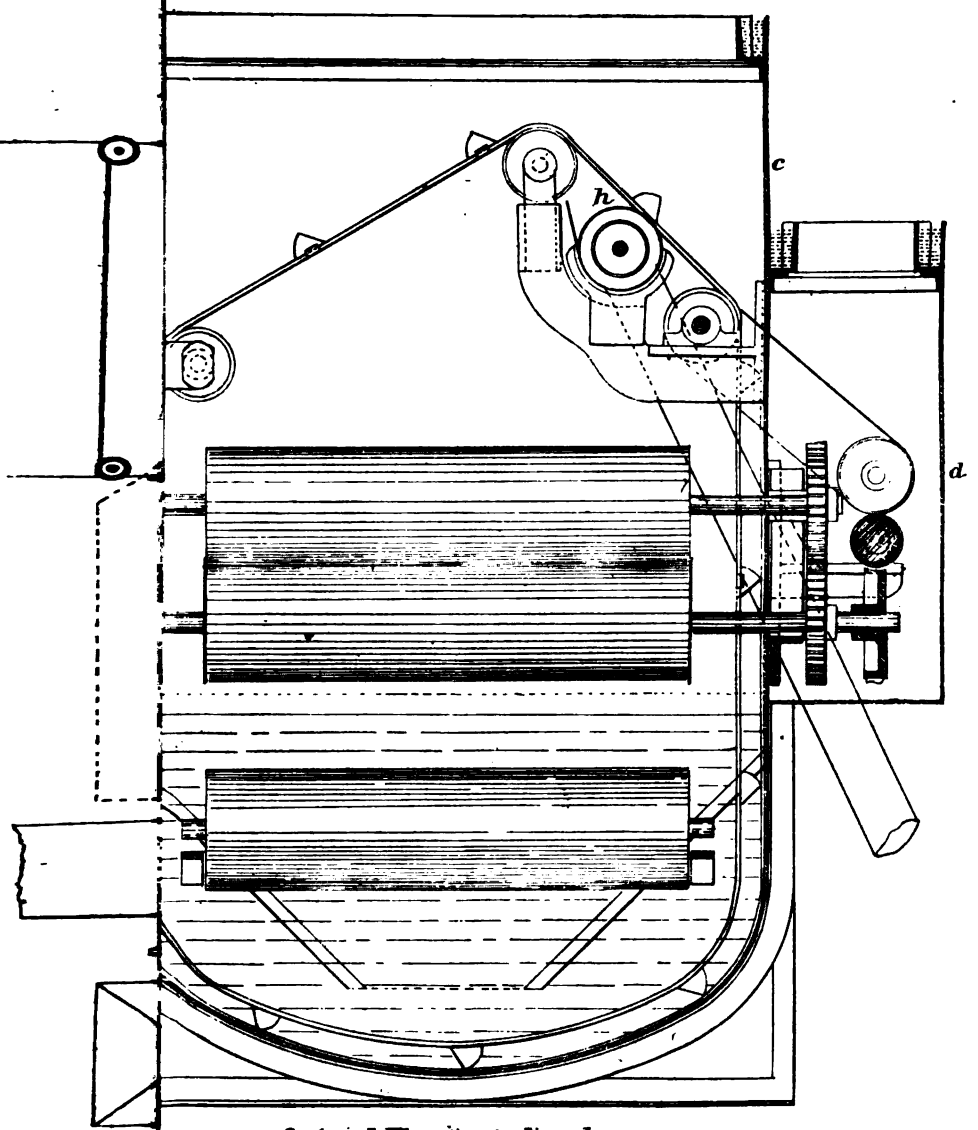

Sectional Elevation on line ab.

FIG. 71D.—Messrs Singer & Judell's Wool (solvent) Scouring Machine.

[*To face page* 112

DIAGRAM 14.

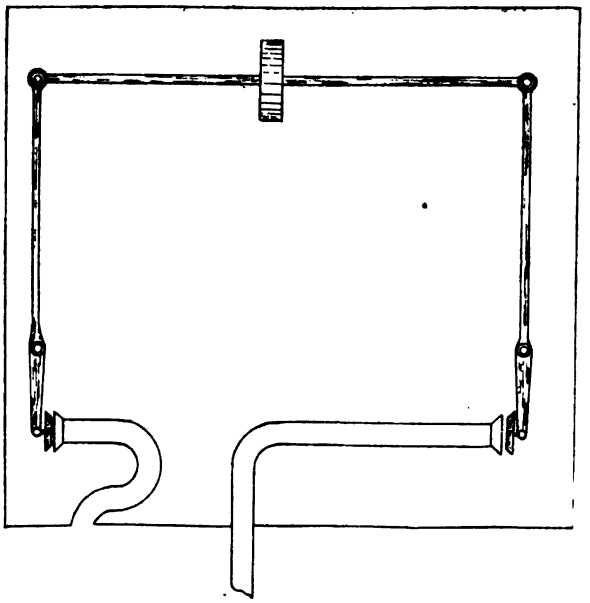

FIG. 71E.

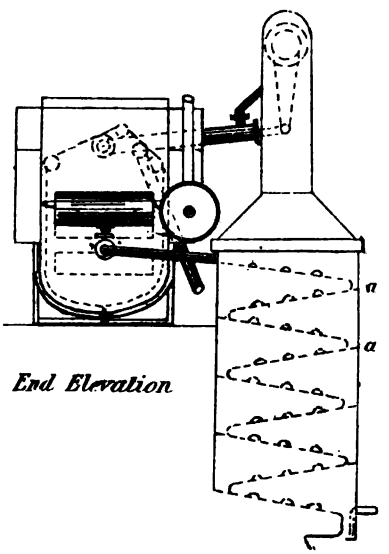

End Elevation

FIG. 71F.

[*To face page* 112.

heated internally with steam, and is also squeezed between the hot rollers. At length the band emerges, bearing the washed and dried wool. The top band now departs horizontally to a more distant roller before descending; the lower one, bearing the wool, passing over one nearer at hand, descends sooner, and lets the wool fall into a suitable receptacle or shoot, and turning around another roller lower down re-enters the apparatus as top band to that band which previously separated and now re-laden with fresh raw wool, re-enters as bottom band (figs. 71B, *c*, *f*).

"We have thus followed the mere course of the wool and observed that this is characterised by a continuous automatic action. Let us now follow the course of the gaseous currents, for what must immediately strike the imagination is that the first cell and the lid of the apparatus dipping into it is not luted when operating (only luted in water quiescence of the machinery). Carrying the eye to the drying-chamber above, a pipe, wide in its upper part and communicating with a cylindrical worm condenser, is noticed. In that wide pipe a draught is created by the aspirating action of a fine water-jet or spray under pressure at *b* (fig. 71B). This draught, however, is but a gentle one, something like that produced in a vitriol chamber system. It is just sufficient to prevent carbon bisulphide vapours from receding and passing under the lid or cover dipping into the empty tank or cell into which the wool-band first enters. It is also sufficient to carry the vapours of bisulphide from the drying chamber to the condensing worm, where those vapours are condensed and so recovered, and returned to the system. The connection between the atmosphere of the bisulphide cells and the drying chamber is by means of a draught pipe furnished with a tap *e*, shown in fig. 71B. We notice that the general motion of the atmosphere of the system is in a direction from the entrance of the wire-band, with the same end towards the water-jet and condenser. All carbon bisulphide vapours in the entire system then tend towards and pass down the condensing worm, then returning to the 'dividing-cistern,' dividing bisulphide from water (*d*, fig. 71B). Let us now see what becomes of the dirt deposited from the wool. So soon as the carbon bisulphide dissolves out the wool grease, etc., the dirt at once falls out of the wool aud sinks to the bottom of the vessel. I will show you how this takes place by a small experiment in a stoppered funnel, in which I have placed some raw wool. I pour in some carbon bisulphide, and whilst this liquid is effecting solution, you may perceive the dirt dropping out of the wool. Now through each of the first six bisulphide cells or tanks (see fig. 71C and also fig. 71D) works an endless chain of perforated dredgers. The bottoms or dirt of the cells are thus continually dredged up, the oily bisulphide draining back into the cells during the upward motion of the little dredging buckets. These buckets just on their descent and consequent reversal empty their contents into a gutter of semicircular section (*h*, fig. 71D) through which an endless-

screw agitator works (see fig. 71E). The screw works the dirt and sand, still containing some oily bisulphide, in a slightly upward direction along this gutter; meanwhile an isolated dredging system, precisely similar to the six already mentioned, only that it is with non-perforated buckets, and which is fixed to the tenth bisulphide cell, brings up continually a fairly pure bisulphide and empties it into the gutter with sand, dirt and still some oil (see fig. 71B). The bisulphide runs along by its own gravity back towards the first cell, and in a contrary direction to that of the motion of the sand and dirt, which it continually washes. The washings continually flow into the first cell, which contains the most contaminated or highly charged bisulphide. The washed sand and dirt pushed on by the screw at length enter a down pipe (fig. 71B, and also fig. 71D, *h*) where they drop into a retort (not visible in the drawings) connected with a Liebig's condenser. They are subjected to heat in this retort, when the bisulphide passes over and is condensed and returned into the delivery main along with the other supplies of bisulphide at *c*, fig. 71B. The retort consists of a long pipe in which works an endless screw. This retort is double steam-jacketed, and the end is connected with an aspirator to draw off CS_2. The sand and dirt drop out at the end. But let us further follow the course of the vapours to the point of their recovery. I have said that not a steam-jet, but a water-spray-jet creates the suction or draught carrying the vapours into the worm (*b*, fig. 71B), which commences, according to strictly scientific principles, wide, and gradually tapers down as cooling and condensation proceed. The condensed liquid falls from the worm into a small collecting space, runs by a pipe to the bisulphide main *c* (fig. 71B), where it joins the stream coming from the recovery-still to be afterwards described. The bisulphide then falls into the cell or tank at the end of the tank system, where it settles down as a lower layer under water. The air draughted through the system escapes by the central vertical pipe fixed above the collecting space in which the worm terminates. The minute quantity of bisulphide escaping with the air, it is not considered worth while to collect. The top of this shaft is fitted with a cover valve which is closed when the apparatus is not working.

"Let us now see how the carbon bisulphide is distributed and the water disposed of in the last tank receiving the recovered solvent. The overflow siphon-tube for the bisulphide is one which every tar distiller is accustomed to for separating the bottom water layer in his receivers from the supernatant one of naphtha (fig. 71F). However, in such cases the lower layer, the water, is valueless, and is run off to waste, but in our present case the lower layer is the one of principal value. We need, then, an automatic arrangement for preventing the level of the CS_2 from rising above a certain point, or we shall incur the risk of getting bisulphide returned in the upper, the water overflow. Messrs Singer & Judell have adapted a highly ingenious arrange-

ment for this purpose, so that it is quite impossible for the level of carbon bisulphide- and water-layers to be other than constant. The carbon bisulphide overflows into and supplies the bisulphide tank nearest to the water-tank system, and the water overflows into the water tank next to the receiving or diving tank with automatic contrivance. This automatic contrivance consists of a float (see fig. 71F, and also fig. 71B, *d*) which sinks in the water of the receiving tank but floats upon the carbon bisulphide. Through it, above and below, passes a slender rod with swivel joint at either end, connected with the terminals of two levers, whose opposite ends are armed with stoppers closing or opening respectively the water and bisulphide overflows, above and below. It is now manifest that when adjusted for a particular level of bisulphide in the 'divider,' if that level rose the float must rise, would raise the ends of the two levers connected with its axial-rod, and these levers, acting on their fulcrums, would respectively close up the water overflow pipe and open the bisulphide overflow siphon (which delivers bisulphide to the bisulphide tanks just as water is siphoned over from a tar-distiller's 'divider'). Thus a compensating automatic adjustment is secured, and, in principle, it is closely analogous to the float adjustment for regulating the steam pressure, and consequently the temperature, in distilling benzene and toluene, etc., in the Savalle's dephlegmating column. The water and bisulphide then respectively overflow into the neighbouring tanks for these liquids, and so move in a direction opposite to that in which the double perforated belts with wool are travelling. Hence wool that has become cleaner always meets with a current of bisulphide that is purer still. The same thing is true of water.

"Let us now follow the bisulphide in its course. This overflows from tank to tank till it reaches the first cistern, when, overflowing underneath the inner cell holding the band and rollers and passing through a fine strainer of wire gauze (*g*, fig. 71C), it enters through the exit pipe, furnished with regulating tap (fig. 71B), and is slowly fed into the retort, of special construction (fig. 71F). The interior is so arranged that the oily bisulphide flows down grooved sloping plates, along the bottom of the grooves of which a steam pipe is laid. The oil, free from bisulphide, at length reaches the bottom of the series of plates or trays in the retort, when it collects in the little cistern and overflows by the siphon pipe, as shown in fig. 71F. At the sharp, almost angular curve made where one groove joins the next on a sloping tray, the steam pipe, to prevent obstruction of the flow of oil, making a small arch or bridge, enters the next groove lower down and again lies along the bottom of it. These small arches are shown at *a*, *a*, fig. 71F.

"Allow me now to point to two or three apparently trivial devices in chemical engineering which, nevertheless, are calculated to astonish us by the important results achieved by them. Notice first (fig. 71B, and also

fig. 71c) the sloping summits of the respective inner and outer false sides of the carbon bisulphide tanks. It will be observed that the slopes increase the depth of the tanks, whilst they guide and drain the expressed liquors from the rollers down again into the proper tanks, so that those tanks containing purer bisulphide are not contaminated by bisulphide drainings from a less pure tank nearer to the final and most highly charged tank. Besides this, by increasing the depth of the tanks in the manner described, an opportunity is afforded for the most highly charged bisulphide in each tank, which is consequently of the lowest specific gravity, to overflow into the neighbouring tank in the most economically advantageous way, viz., at the top, and with the same advantage, to enter that neighbouring tank at the bottom. In the case of the water tanks, a similar arrangement is devised, but since the water most highly charged with saline matters, etc., will possess the highest specific gravity, and so lie nearest the bottom of the tanks, the overflow takes place from the bottom of one tank and by the top of the next one into which the liquor runs over. This is made plain in fig. 71B.

"This is not an apparatus that has been merely worked out on paper. It has been very carefully operated in Australia for some time by the inventors, and I am assured that in the neighbourhood of the scouring plant no smell whatever of carbon bisulphide can be detected when the apparatus is in full work.

"A patent has been still more recently been taken out by G. & A. Burnell of Adelaide, for a very similar piece of apparatus to that of Messrs Singer & Judell, but it is one in which it is proposed to use benzene or petroleum spirit.

"In using petroleum spirit, a rectification would first be needed to free the ordinary spirit of the trade from the partly resinous bodies of higher boiling point which it always contains. I miss in Burnell's specification any account of a continuous distilling apparatus to restore fresh solvent and give a continual supply of oil, and I fear for the security of the leather lip arrangement to 'prevent as much as possible the escape of the fumes.'

"Messrs Singer & Judell calculate that the profits derived from the by-products of their process (the wool fats and potash salts, etc.) should pay the whole expenses of royalties, apparatus, and bisulphide required."

Since the date in question the machine has been given a fair trial but has not succeeded owing to various causes, but chiefly from the danger and expense of the solvents used. During a trial of the machine at Messrs Isaac Holden & Co.'s, Bradford, considerable leakages of an inflammable solvent led to an explosion in the sewers with fatal results.

A machine which has met with more success, but using carbon tetrachloride as a solvent, is that invented by Mr Oscar Reichenbach, M.I.C.E.

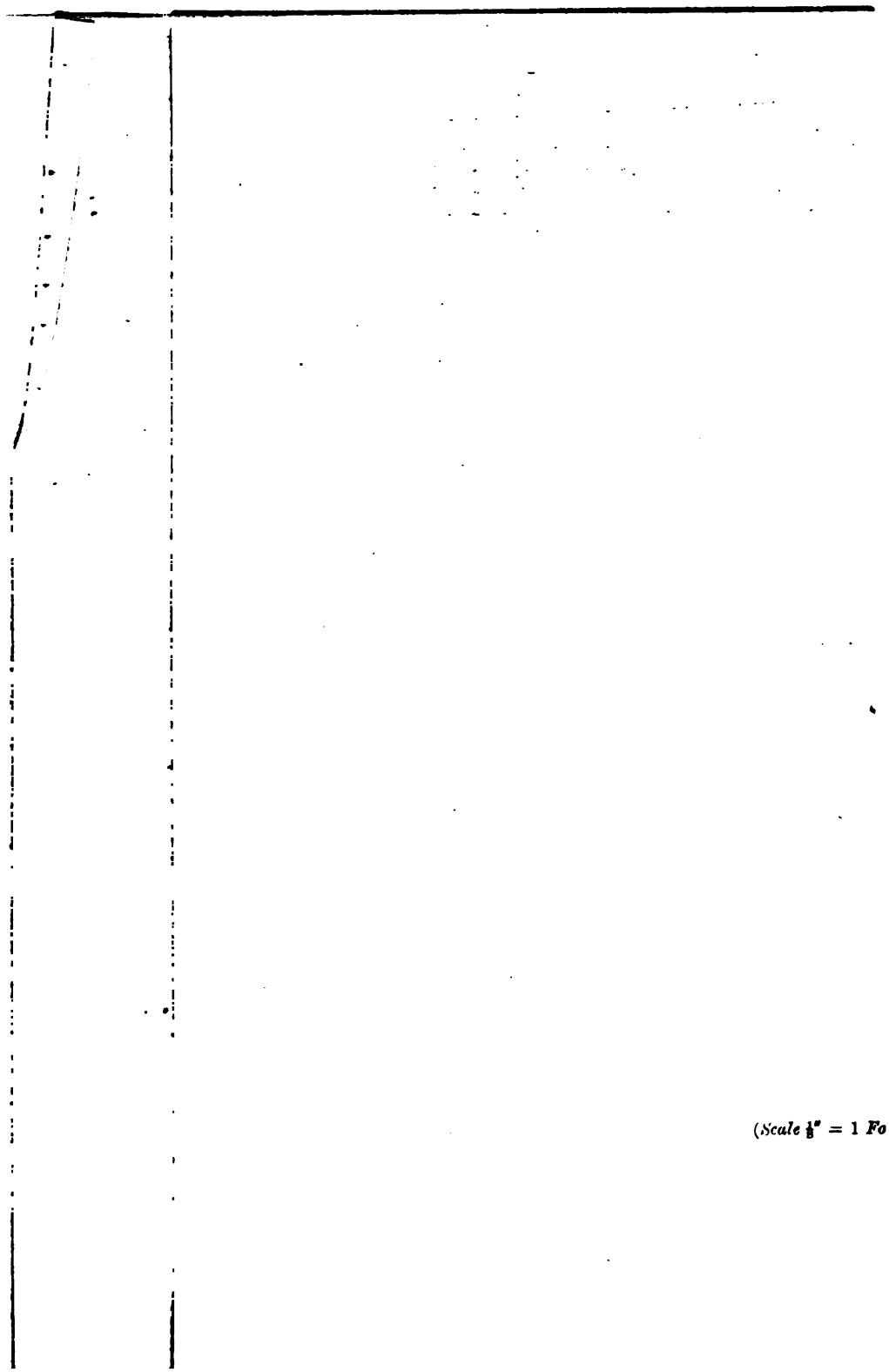

(*Scale* $\frac{1}{8}$" = 1 *Fo*

[*To face page* 117.

The machinery consists of a series of hermetically closed washing machines or tanks (fig. 72). As described by the inventor:—

"The wool is fed on to bands, is carried by the same to a movable shoot, and is discharged alternately into two compartments of a hopper which serves two air locks at the top of a shaft (fig. 72).

"The shoot is moved rapidly, with comparatively long pauses intervening. The valves admitting wool into the air locks are opened and closed alternately, and in such a manner that both upper doors are simultaneously closed during the greater part of the time. The lower doors of the chambers are open and closed alternatively, but during equal intervals of time. At the lower portion of the chambers an air valve is provided communicating with a pipe leading to the scrubber. This valve effects a communication between the chamber and the scrubber when the lower flap valve of the chamber is closed, but does not permit any direct communication between the shaft below the door and the scrubber. Any vapour which may have found its way into the chamber will collect in its lower part and flow to the scrubber or be driven out by the current caused by the downward action of the opening upper valve and by the wool descending in the chamber resembling a piston in action. The wool is precipitated from the chamber into the shaft, and is gradually drawn or forced by claws carried on arms worked by feeding rolls in the shaft, and by the feeding rolls into a washing machine containing the solvent.

"The lower end of the shaft dips into the solvent, which forms a seal as regards the atmosphere contained in this washing machine, preventing its escape or mixture with the air in the shaft.

"As the area of the solvent exposed is but small, and there is no upward current of air (except that resulting from the displacing of the air contained in the wool), the amount of vapour given off will be small.

"A flap valve, which is kept closed when the machines are not at work, is placed in the shaft below the feeding rolls. When commencing work a valve in an air pipe communicating with the scrubber, and which is kept normally closed, is opened, and the shaft is charged with wool. Any CCl_4 fumes which may have collected above the level of the flap valve will be forced by the wool into the scrubber. The shaft having been charged, the valve in the air pipe to the scrubber is closed, the feeding wheels are set in motion, the wool gradually fed into the CCl_4, and the washing machinery is put in motion.

"As the wool sinks into the CCl_4 the air carried by it will be displaced and rise in the shaft, displacing the air in the wool above. Any fumes carried up by the ascending air will be absorbed and carried down by the continually descending wool. The vapour of CCl_4 being 5·24 times heavier than air, the higher the shaft the less CCl_4 vapour will find its way into the air-lock, or be carried thence to the scrubber. The vapour will be partially absorbed

by the grease. Further, as at the end of the machine the CCl_4 contains more grease in solution, relatively less CCl_4 will evaporate. The amount escaping to the scrubber will depend on the height of the shaft, the amount of wool in the same, the rapidity of descent of wool, and the density of the vapour given off by the solvent used.

"The method of feeding would present advantages, although not so great, even where the vapours of the solvent used are lighter than air.

"Motion is imparted to the feeding rolls by means of friction wheels of a construction which permits of readily varying the speed of the driven wheels by moving the latter longitudinally on the shaft.

"The flap valves are all faced; the upper ones and their seating are provided with a groove. When the machines are not at work oil or soap and water is admitted from the small oil cistern into the groove, and no fumes will escape. The spindles of the rolls and valves are worked through metallic-packed stuffing boxes, into which oil or soap and water is admitted, and the valves in the pipes carrying either liquid or gaseous solvent are surrounded by a water casing.

"The mechanism in the washing machines may be of any desired description. That illustrated in the designs is simple and effective.

"The machine containing the solvent is divided into four compartments. From the upper part of the one behind the shaft, the solvent, on attaining the desired degree of saturation, is drawn off by automatically acting valves.

"The wool is carried forward in the machines by the following means:—

"Two sets of wheels and axles, arranged to turn freely on rollers, are intermittently moved backwards and forwards on the same roller paths; each set is connected by parallel longitudinal frames passing over the axles, and carrying projecting horn-plates, so as to permit the frames of one set to pass uninterruptedly backwards and forwards over the axles of the other set. The axles of the one set are connected, by connecting links keyed to the axles, to side rods, to which a back and forward motion is given by means of connecting rods and crank pins in a pair of geared wheels revolving on pins near the extremity of the machine farthest from the shaft. During the first portion of the stroke the roller frames are held in their position by means of pawls, and the roller axles, on which a number of arms are keyed, will revolve; when, however, the arms have attained the desired position the pawls are released, and the turning of the axles is prevented, and the rollers and axles move bodily in a longitudinal direction, until the frames are arrested. The axles and arms will then turn in an opposite direction.

"The side rods carry a fixed arm. A connecting rod connects this arm with one end of a lever, the other end of which is connected by means of a rod to a second lever mounted on an axle carried by the second roller frame. The other end of this second lever is connected to a set of side rods (similar to the first), which in their turn are connected by means of links to the

axles of the second set of rollers. The axles of the rollers intervene between the two sets of side rods. The horizontal movement of the first set of side rods will impart a similar motion to the second set, but in the same sense during rotation of the axles, and in an opposite sense during the back and forward motion of the cradles. When the arms of the one set are being lowered, those of the other are being raised; the arms will then approach each other, and after the termination of the longitudinal travel the arms of the first set will be raised and the second lowered, and the respective arms and axles will recede from each other.

"Near the end of their travel, the roller frames strike against springs which absorb and give out the power otherwise lost in the change of motion, and ensure a quiet and easy motion. The side rods and arms of the two sets balance each other. The wool is carried forward by the arms and deposited on an endless band, thence between rolls, and precipitated into a shoot hermetically sealed by the liquid in the adjoining machine.

"The shaft and the various machines are provided with sight holes, and the solvent machine with a gauge.

"The solvent is admitted by a self-acting valve to the machine at the end farthest from the shaft. Passages are provided in the partitions near the sides of the solvent machine to permit the flow of the solvent more heavily charged with grease towards the shaft and enable the solvent to be used to a greater degree of saturation. The sludge after leaving the wool is brought into contact with solvent containing the least grease, and is allowed to settle, and removed by a worm hereafter described. The second machine is similar to the first, but receives only such solvent as may be carried over by the wool. The third, fourth, and fifth machines are of larger capacity, and broader than the first and second; the details of the mechanism similar; its motion, however, slower.

"The first three machines have closed covers, the remainder easily removed water-sealed sheet-iron covers. The desired quantity of water is admitted to machine No. 5, and passes thence to Nos. 4, 3, and 2, whence it is drawn off for treatment.

"All the machines have shoots attached, the liquid in one machine sealing the atmosphere of the adjoining one; and only such air as may be carried by the wool through the liquid will pass from one machine to the other in the direction of the wool travel, and such air will be again carried back in the manner hereafter described. The atmospheres of the different machines will therefore contain less solvent vapour as the exit end of the machines is approached.

"The atmosphere of machine No. 5 is connected by an air pipe with the scrubber. Machine No. 5 is provided with two sets of squeezing rolls, and after leaving the latter, wool is carried to the drying machines or tables. Small air pipes provided with light self-acting valves connect the atmospheres in

machines Nos. 1 and 2, 2 and 3, 3 and 4, 4 and 5, and permit air to pass in a sense opposite to that of the wool travel, from the atmosphere of the one machine into that of the adjoining machine should the pressure in the latter fall below that in the former, but does not permit of its return in the direction of the wool travel or open end. The greater portion of the air carried by the wool will rise and return to the machine, from which it has been conveyed by the shoot, as the wool descends into the liquid, but any loss will be made good in the manner described.

"Should the pressure of the atmosphere in No. 1 rise above that in No. 2, the solvent would rise to a higher level in the shaft; less air or vapour would be carried into machine No. 1 by the wool, and a little more into the water in machine No. 2. The relative amounts of the solvent contained in machines Nos. 2, 3, 4, and 5 decrease in geometric ratio, and will be found extremely small in machine No. 5, even on disadvantageous suppositions. The amount, therefore, carried away by the wool or air to the drying machines or scrubber is very small. The greater the number of machines in series, the smaller the amount of water required for washing.

"Air pipes connect the machines with the scrubber, but their valves are normally closed; they are provided to draw off any vapour which may be present when the machines are opened out for purposes of repair. A slight draught only is maintained in the scrubber, and in no case is there an open connection to the same from any vessel containing the solvent, unless the latter is water-sealed.

"The solvent, on attaining the desired degree of saturation, is drawn off from machine No. 1 by a valve whose action depends on the density of the liquid.

"The valve chamber consists of a cylinder provided with two compartments, and two large floats actuating valves.

"The upper float is completely submerged, and is dependent in its action on the variation in the density of the liquid. When this density decreases, the valve opens and allows the liquid to enter and rise in the lower compartment until its level is sufficiently high to lift the lower float and valve. An air pipe connects the atmosphere of machine No. 1 with the atmosphere in the valve compartment. The upper valve is not affected by any differences in pressures in the machines and pipes leading to the stills, and can therefore be made of any desired degree of sensitiveness. The valve will open and close at a difference of 2 per cent. in the density of the liquid. This density will vary with the temperature, and is provided for by varying the power of the float when desired. The valves are so arranged that if, owing to any unforeseen cause, for instance leakage in the float, one did not return to its seating, the liquid in the machine would not fall more than a few inches below its normal level. By-passes are provided in case it is desired to cut any of the valves out of the circuit.

"The solvent feed is regulated by means of a valve communicating with a small overhead tank working under a constant head, the small tank being supplied with solvent from a larger one into which the solvent is pumped.

"The valves and tanks are provided with air-pipe connections to machine No. 1.

"The valve will work at extremely small differences of level.

"A determined amount of water is admitted to machine No. 5 and traverses machines Nos. 4, 3, 2, and is drawn from the latter by the aid of a valve, and passes to a heater.

"It is estimated that with the machines shown in working not more than about 3 lbs. of solvent per ton of cleaned wool would be carried to the drying machines by the wool.

"The sludge which collects in machines Nos. 1 and 2 passes to two small receivers, and is lifted by worms and discharged into the pipe conveying the water and solvent to the heater. The upper portion of the casing of the worms is connected by air pipes with their respective washing machines; no siphonings or variations of pressure will occur. They are provided with washing-out pipes. If preferred, the sludge could be discharged into a collecting vessel, the liquid passed through screens or filters and drawn off to the heater, and the thick sludge fed into a separate still.

"It is not, however, considered that this is advisable unless much larger quantities are worked.

"The pipes conveying the water and solvent to the heater are provided with ball-check valves, to prevent a return flow of the liquid in case of any unforeseen temporary rise of pressure in the stills. The heater consists of three tiers of pipes; the lower tier is heated by water from the condenser, which passes from the heater to a water-supply tank, feeding machine No. 5.

"The two upper tiers are heated by the hot water from the stills. The stills are, however, similar in construction and capable of dealing with much larger quantities, and are interchangeable.

"The stills, which are lagged and provided with suitable heating coils, consist of an outer and inner vessel; the inner vessel being in the form of an open pot with its rim standing at a higher level than that at which the liquid in the outer vessel is maintained. The liquid from the heater is discharged into the pot, and overflows in a thin sheet into this outer closed vessel, from near the bottom of which it is withdrawn by a rising pipe, and conveyed to a valve regulating the level of the liquid in the outer closed vessel of the still. The greater portion of the solvent will be evaporated from the central pot; the liquid flowing over the rim of the pot in a thin film will part readily with any solvent which it may have retained; the liquid in the outer portion of the still will be raised to a higher temperature than that in the pot from which evaporation is going on. The stills are fitted with water pipes for cleaning-out purposes, and with the requisite gauges and thermometers.

"Above the liquid in the still, double screens and baffle plates are provided for intercepting any grease which may be carried away by the vaporised solvent, and which will flow down the baffle plates into the liquid in the stills.

"The valves are made with double beat action in order to more readily overcome resistance arising from inequality in pressure which may occur on their discharge and feed sides. The grease from the solvent still passes direct to the bottom of a settling tank below. The hot water and grease from the other stills passes to the same tank after first passing through the heater. The top of this settling tank is kept at a sufficiently low level to permit of a ready discharge of the hot water and grease at all times, obviating admission of air or free steam either to the stills or condenser. The lower discharge tank is covered, and is connected by an air pipe with the scrubber. It is provided with a grease overflow. The sludge water and salts contained therein flow to a settling and filter pond, from which any remaining grease flows over the sides into a channel for collection. Any solvent which may have escaped is collected in the bottom of a well and returned to the pump, the well being provided with a valve permitting of the passage of solvent only. The filtered water is either run to waste or re-used if desired for concentration and subsequent recovery of the dissolved salts. The sludge is removed from the filter beds as convenient.

"The vapour from the stills passes to a small collecting chamber, and thence to the condenser, the condensed solvent flowing into a receiving tank. This tank is closed and water-sealed; it is connected with the air-pipe leading to the scrubber, and is provided with a valve of such a construction as to maintain a constant depth of water seal over the solvent. The valve is connected to two floats, one submerged partially in the solvent, the other floating near the surface of the water. One end of a water-supply pipe is connected to one float, and has two joints, so as to permit rise and fall freely at one end, that end being at the same time connected to a relatively fixed pipe. The second float is connected to a lever, and acts on a valve connected to the first float and communicating with the water-supply pipe, and is acted upon by any variation in the vertical distance between the two floats. The one float is connected to a valve regulating the admission and escape of the solvent at any desired level. The vessel is provided with a water overflow pipe with a siphon trap. The solvent receiving tank is connected to a second hermetically closed tank, virtually forming a part of the first tank, and from the latter the solvent is pumped to the high-level reservoir. The solvent pump is surrounded by water."

As a mechanical arrangement the machine is undoubtedly deserving of praise. In fact, so far as the mechanical side of the system is concerned it may be considered a success, the difficulties lying on the physico-chemical side, namely, the recovery of the solvent from the wash water and the fat.

Up to the time of writing, it is regrettable that this has not been made a financial success.

A fairly large-sized plant was worked at Brownroyd by the Wool Degreasing Co., Ltd., during 1896-7-8 but ultimately abandoned.

Even on a small scale carbon tetrachloride used as a solvent for wool grease cannot be recovered without loss. As an experiment, 100 c.c. of CCl_4 were taken and nearly saturated with wool fat. The solution was then placed in a retort and distillation proceeded with, up to a temperature of 100° C., the retort being immersed right up to the neck in water at this temperature. Of the 100 c.c. placed in the retort, 89 c.c. were recovered, though the boiling point of CCl_4 is only 78°·1 C.

The following results were obtained in a similar manner:—

Solvent taken.	Grease dissolved.	Solvent recovered on Distillation.	Increase in weight of Grease Residuum.	Highest Temperature.
50 c.c.	3·175	45 c.c.	·647 grms.	150°
50 ,,	6·114	44 ,,	1·415 ,,	150°
50 ,,	16·534	46 ,,	2·785 ,,	150°
50 ,,	20·308	46 ,,	2·958 ,,	150°

It was claimed that on a large scale similar results were not obtained by Mr Rich, manager of the Wool Degreasing Co. Here it was stated that the mean loss of solvent carried away by the fibre on several trials was ·17 per cent. on the clean wool, ether test, and 4 per cent. on the grease. Based on these losses the following is an estimate for one set of washing machines working night and day, of 40,000 pounds of clean wool per week:—

Loss of carbon tetrachloride carried away by the wool, 0·17 per cent. on 40,000 lbs.,	68 lbs.	
Ditto in distillation, 4 per cent. grease or 1 per cent. on cleaned wool,	400 lbs.	
Allow contingent losses for leakages, etc., say 2 per cent. on cleaned wool,	800 lbs.	
	1268 lbs.	
Say 11 cwt. at 66s.,		£36 6 0
Two foremen,	£3 10 0	
Two engine drivers,	2 10 0	
Eight labourers,	9 0 0	
		15 0 0
Water, coal, oil, etc.,		5 0 0
Establishment expenses, including rent for land not at present occupied,		15 0 0
Expenses per week,		£71 6 0
Receipts:—		
40,000 lbs. cleaned wool at ½d.,	£83 6 0	
4 tons recovered grease at £7,	28 0 0	
		£111 6 0
Probable profit per week, £40.		

The fact that the company went into liquidation is *prima facie* evidence at any rate that the above estimated profit was not realised.

It is pretty evident, too, that the vital point in connection with this process is the amount of solvent lost, and it is probable that in actual working with comparatively little experience the losses were considerable. For the minimum loss to be arrived at in a few months is almost impossible (compare, for instance, the commercial development of Solvay's ammonia soda process), and it is probable that this is the process of the future for wool-scouring. It is scientifically correct, and the difficulties to be overcome are purely mechanical and similar to many which have been overcome in other branches of industry.

Essentially the machine is one for extracting fat from raw wool, but when this is completed much mineral and even organic matter other than fat is left in the wool and is not removed therefrom by such washing as is afforded by the machine here described. Certain kinds of raw wool, too, are stained, such stains having been acquired while on the back of the sheep; and these, of course, are not affected by a solvent for fat, although they are removed by the usual method of wool-scouring. The result of this was that many samples of wool having been really thoroughly degreased were sent back by woolcombers for re-scouring. Samples, too, submitted to woolcombers having been thoroughly degreased were often rejected and condemned as requiring to be scoured *de novo*, owing simply to the presence of vegetable colouring matter and dirt other than grease.

CHAPTER IV.

TANNING AND FELLMONGERY.

In the processes of *Tanning and Fellmongery*, more than in those connected with any of the industries dealt with herein, the object aimed at is simply the cleansing of a raw material from obnoxious filth.

Most of the industries referred to elsewhere in this volume involve first the cleansing of a raw material, then the filling, finishing, polishing, loading, colouring, dyeing, weaving, carding, spinning, extraction, or some such additional operation. But here the hides or skins are just divested of what is not desirable in leather, and such divested portions are, with the exception of wool and hair, worthless except as offal or manure.

From the more advanced processes to which leather is submitted, such as currying and enamelling, few, if any, waste products ensue in important quantities.

Whether the raw material be hides for sole leather, sheepskins for wash leather, calf skins for kid, or lambskins for gloves, it is first soaked or washed in clean water in order to remove blood and dirt of any description. This is still done in running streams in a few instances, but such action cannot be justified if there is any reason at all for the Rivers Pollution Prevention Acts. Where special pits are provided for washing or soaking, the discharges therefrom carry away large quantities of putrid, offensive organic animal matter, and these may for present purposes be described as sewage. The steeping in lime or the decapillary process results in a discharge of a very similar character, and the liquids from the washing or steeping and the liming operation form probably the bulk of the liquid waste. The other liquors are the washings after liming, the tan pit or the suspender liquors (generally containing salts of lime and tannic acid, putrid extracts from the skin, etc.), salting liquors, and waste dyes. In cases where a bate of dung, bran, or similar drenches is used, it would be folly to regard these as other than solid manure, and as such they ought to be disposed of.

The waste liquids as a collection then contain, in solution and suspension, organic animal and vegetable matter with a smaller proportion of mineral matter, and that principally lime. Samples examined from various tanneries have given the following results, the figures for dissolved mineral solids being high in some cases, due not to lime but to the salt in pickling liquors.

The results are extracted from the Ribble Committee's published *Proceedings.*

Parts per 100,000.

Dissolved Solids.			Suspended Solids.			Oxygen absorbed in four hours.	Ammonia (Albumenoid).
Min.	Vol.	Tot.	Min.	Vol.	Tot.		
26	28	54	8	8	16	6·4	·858
171	127	298	114	11	125	22·2	3·33
338	168	506	28	100	128	19·9	2·8
68	98	166	19	87	106	42·2	5·0
108	171	279	29	53	82	31·6	4·3

Even after the very complete settlement of the particles in suspension, the liquid contains in solution much objectional dissolved matter, the possible cause of serious pollution to any stream into which it might be discharged. On stagnation before a dam it is liable to putrefy, evolve offensive gases, and act prejudicially on both animal and vegetable life therein, apart from nuisance in the surroundings generally.

The dissolved objectionable matter cannot be precipitated from solution to any extent practicably so far as is at present known, and the same treatment must be applied as in the case of sewage—viz., some form of filtration applied; not for a mechanical straining, but to effect a chemical change.

The first Rivers Pollution Commission reported that the noxious ingredients in tannery waste could neither be mechanically intercepted nor chemically precipitated, but that they could be chemically burnt up, or oxidised if the waste were used for irrigating land. As pointed out elsewhere in these pages, it is probable that the change brought about was regarded as a direct chemical action. Indeed, the experiment recorded concerning the fixing of a sealed bottle to the connecting rod of a stationary engine, after it had been partly filled with sewage, and the search for any diminution of the oxygen also enclosed, after several days' shaking up, makes this pretty certain.

But later researches have shown that the oxidation is brought about by means of an intermediary—a living cell, or more correctly a number of living cells, each taking its own particular part in the business.

The oxidation of organic matter in solution such as takes place in soils does not proceed if the soil itself and the organic matter are first rendered sterile by heat or some other agent, yet the same matter is oxidised as usual if placed in soil not sterile, but charged with the microscopic organisms natural to it.

The breaking up of the nitrogenous matter is not a single process; the changes are many and not yet thoroughly understood. The final products are generally carbonic acid, water, and ammonia, when air is present, and in most cases the ammonia is further oxidised to nitric acid; but before the

complete change from, say, animal excreta, animal or vegetable tissue, deposits, accretions or secretions, to these inert compounds is reached, many lesser changes must be wrought, each by its own agent.

But they *are* wrought under suitable conditions, conditions of environment and temperature. Air, light and a temperature above the freezing point of water, and the absence, of course, of sterilising agencies, are essential for oxidisation.

These being granted as the necessary and *sufficient* conditions, so far as the existence and activity of the desirable organisms are concerned, soil does not present itself as the most suitable medium for the permanent maintenance of those conditions. Something more porous, less liable to solidify and more amenable to artificial heat influences, is required. Several different media have been tried successfully, accompanied by artificial methods of both ventilation and heating.

Of these the principal may be said to be the Sutton, the Septic, and the Thermal Aërobic Systems.

The Sutton Filters.—These were laid to the instruction of Mr Dibdin, following others which had been laid and whose action had been investigated by that gentleman at Barking Creek. These latter were in the wake of some valuable and highly scientific experiments made by the Massachusetts State Board of Health in 1890–3.

On page 7 of the report of that Board, dated 1890, the following appears :—

> "As nitrification takes the leading place in the process of purification of sewage, we must then regard as essential to the process the conditions most favourable to the action of the organisms which produce nitrification. Among these conditions experiments had already shown that the presence of oxygen was essential; so was the presence of organic matter, of moisture, and of some alkali; and the temperature should be nearly that which is favourable for plant life. Such organisms had been known to exist either in sewage or in the material of which the filters were composed, and, when existing with the other conditions favourable for producing nitrification, large quantities of organic matter could be converted into inorganic and mineral matter.
>
> "About 4000 chemical analyses of the sewage applied to the tanks and of the filtered effluent have been made in twenty-two months, the results of which are given."

These results convinced the investigators that the extent of the purification effected in liquid sewage in filters was dependent, not so much on the speed of filtration or the character of the filtering medium, as upon the bacterial activity of the filter.

Warington and Frankland had previously proved the nitrification of ammonia into primarily, nitrous, and secondarily, nitric acid, by separate

and distinct ferments. But the Massachusetts experiments were probably the first to distinctly prove the *practical* decomposition of nitrogenous organic matter to carbonic acid, water, and ammonia by means of micro-organisms. In this operation the oxidation of the carbon is first commenced, the nitrogen being liberated to form ammonia. It is, however, not at all probable that the whole of the carbon is oxidised first. The oxidation of the carbon into carbonic acid may proceed side by side with the fermentation of ammonia into both nitrous and nitric acid. To quote again from the reports, page 709: "The process of the decay of organic matter, whereby it is converted into inorganic matter through the action of oxygen, is one with which we are familiar in a general way from personal observation. The two extremes, living organised matter on the one hand and inert mineral matter on the other, are sharply distinguished from each other. A minute study of this process shows it to be one of considerable intricacy, differing in character under different conditions, and involving the formation of a great number of intermediate products. Further, it is well known that these changes are not the result of direct chemical action, but are in some way dependent on the life of micro-organisms. The fact that we often speak of these changes inherited from the older chemical notions of direct oxidation, does not imply that this action of the bacteria is overlooked or ignored."

This much, then, being known, Mr Dibdin, rightly regarding the treatment not so much one of filtration as one of bacterial decomposition, decided to try the effect of a process imitating that of fermentation as carried out in the brewery. The brewer adds the ferment, yeast, to the liquor to be specially fermented—malt. As the ferment developed on the filtering medium cannot well be added to the sewage, the same result was brought about by running the sewage into a watertight tank containing the filtering medium, with the bacteria upon it. The bacterial tanks at Sutton were neither more nor less than ordinary tanks, watertight, and filled with such media as burnt ballast, crushed clinker, etc. The results were satisfactory, it being found that clear sewage after about three hours' contact with the medium was relieved of a considerable quantity of the dissolved organic matter, and that oxidation and nitrification had commenced. This form of filter became very common, several being installed at Burnley, Blackburn, Walton-le-dale, Ormskirk, and other places.

But in the meantime the services of another class of bacteria had been recognised and requisitioned. Those previously referred to had been called upon to act only in the presence of air, the products of their existence being fully oxidised and inert. To these the term aërobic has been applied, but another class known as anaërobic or putrefying organisms, the products of whose existence are neither inert nor fully oxidised, had been cultivated specially by Mr Cameron of Exeter, for the purpose of liquefying organic

suspended solids in sewage. It may be that the organisms are one and the same, acting differently under different conditions. The sewage charged with its suspended solids was enclosed in an air-tight tank, and after a time the bulk of the organic solids were found to have become liquefied. Speaking of the action which takes place in the tank Dr Rideal states (*Journal Sanitary Institute*, 1897, p. 65):—

"The raw sewage and the tank effluent were also proved to be devoid of free dissolved oxygen, so that although atmospheric oxygen can leak into the tank, I am of opinion that the amount of direct oxidation in the tank must be very small, and that the oxidised compounds produced must be formed from the dissolution or hydrolysis of oxygen-containing organic compounds.

"Two analyses of the gas obtained (1) from the slotted pipe, and (2) from below the surface of the liquid in the tank, are given below. The second sample burnt freely and neither sample contained any oxygen.

	Per cent. by volume. I.	II.
Carbonic acid,	0·3	0·6
Methane,	20·3	24·4
Hydrogen,	18·2	36·4
Nitrogen (by difference),	61·2	38·6
	100·0	100·0

"Several determinations of the amount of carbonic acid in the gases of the septic tank showed that from 0·54 to 0·81 per cent. was present, or about fifteen times that in the outside air. As the tank was not constructed in such a way as to allow the gases produced to flow uniformly out of the tank, the absolute amount of gas produced per 50,000 gallons of sewage per twenty-four hours could not be gauged, but it is easy to see that with diffusion taking place, the total loss of carbon and nitrogen per day may be considerable. A further and more distinct proof of the large amount of organic carbon which disappears in the tank is given by the fact that the dissolved carbonic acid was greater in the tank effluent than in the raw sewage.

Table showing amount of Carbonic Acid formed in Tank.

In c.cs. N/10 Acid per litre.				Amount formed.
No. of Sample.	Sewage.	No. of Sample.	Effluent.	
1	93·0	5	92·0	0·0
2	24·2	6	92·0	67·8
3	38·0	7	94·4	56·4
4	60·0	8	105·6	45·6
			Average	42·45

"Thus the carbonic acid produced in the tank effluent was determined and found to average 8·8 parts of carbonic acid per 100,000, or 12 lbs. of carbon per 50,000 gallons discharged. As on this particular day 62,238 gallons were discharged, the above amount of carbon should be increased to about 15 lbs. to represent the loss of carbon on this day.

"On November 14, samples of gas were aspirated for analysis from about 4 inches above the level of the liquid in the tank.

Table showing amount of Carbonic Acid Gas in the Air of the Septic Tank.

	Time.	Volume containing equal weights CO_2.	Percentages of CO_2.
Plug No. 1, .	11.25 a.m.	1·8	0·54
,, ,, 2, .	11.50 ,,	1·2	0·81
,, ,, 3, .	12.10 p.m.	1·4	0·70
,, ,, 4, .	12.20 ,,	1·7	0·57
,, ,, 5, .	12.30 ,,	1·3	0·75
Air, . . .	11.15 a.m.	24·4	0·04

Average amount of carbonic acid in air of tank—0·67 per cent.

"The presence of these appreciable quantities of gases containing carbon in the tank and tank effluent undoubtedly proves that considerable purification of the sewage in the tank takes place. Since the date of the above experiment, the tank has been made airtight, and the gases formed have been led off by a pipe and ignited. So that it would be possible for the combustible gases produced to be regularly burnt if a gas holder to regulate the pressure were used.

"As the amount of increase in the total solids in the first set of experiments might have been due to the suspended matters in the samples examined—although one would have anticipated more suspended matter in the raw sewage than in the effluent after sedimentation had taken place—a further new series of experiments was started on November 13, and the samples analysed after filtration. The mean results calculated to a chlorine content of 7 parts per 100,000 are as follows :—

	Total Solids.	Oxygen consumed.	Free NH_3.	Nitrite.	N as Nitrate.	Total N.	Alb. NH_3.	Organic Nitrogen.
Filtered Samples :—								
Raw Sewage, Nov. 13, 14,	55	3·61	8·5	Trace	0·02	12·82	4·3	5·8
Effluent, Nov. 14, 15, .	59	2·73	11·2	Trace	0·022	14·92	2·66	5·7

"It will be seen that the above results give the same general conclusions as were arrived at from the former series, viz., an increase in the total solids, 25 per cent. of organic matter destroyed, an increase of 33 per cent. in the

free ammonia, and a decrease of 38 per cent. in the albuminoid ammonia. The total nitrogen, however, in this series shows a slight increase due to the larger amount of ammonia found in the effluent, or, summarising—

	Purification effected by tank.	
	Oxygen consumed.	Albuminoid ammonia.
1st series, . . .	33	54
2nd series, . . .	25	38
Mean, . .	29 per cent.	46 per cent.

"The liquefying tank effluent is passed for further oxidation and nitrification on to filters such as those described as the Dibdin filters.

"It has been shown, however, that the Dibdin intermittent filters have not accomplished the same amount of oxidation as a continuous flow filter continually aërated. Speaking of the persistent use of intermittent filters, Mr F. W. Stoddart, Public Health Engineer (vol. vi. page 49), states:—'This remarkable unanimity is no doubt in great part due to the influence of the classical experiments of the Rivers Pollution Commissioners, and their triumphant demonstration of the superiority of intermittent over continuous filtration; and it would seem that these truly astonishing results blinded subsequent investigators to the possibility of further improvement except in trifling details such as the composition of the filtering medium.'

"In the face of such weighty testimony to the efficacy of the intermittent system, it would seem presumptuous to suggest that in principle and practice it is radically incorrect; and yet a little consideration will leave no doubt that there is a third and much more promising alternative method, namely, the continuous passage of both sewage and air through the filter simultaneously.

"For it has been recognised from the first, and is indeed beyond question, that the chemical change upon which purification depends is oxidation, and whether this is effected by purely chemical or biological agency is a matter which, however interesting in itself, does not seriously affect the main principle which should underlie the construction and manipulation of a filter, that is, to bring sewage and air into the most intimate contact possible. There will be no necessity to labour this position: it is common ground on which all workers at this subject stand, and yet it is consistently ignored in the adoption of the almost universal intermittent filter. For consider for a moment the cycle of operations in such a filter.

"At the commencement the medium has been drained for some hours, and is merely moistened with sewage that has in consequence been exposed to such air as has been able to find its way into the interstices of the filter. A considerable degree of oxidation is effected in this sewage, and is indicated by the nitrous and nitric acids formed, although, as will be seen

subsequently, the conditions of the intermittent filter are so unfavourable to the oxidising organisms that they never attain their maximum efficiency.

"The filter is next filled up with sewage, a liquid almost theoretically devoid of free oxygen, the air being expelled; in fact, escape apertures are provided for this very purpose.

"The whole system being thus oxygen free, except upon the surface and in the neighbourhood of such air as is entangled in the medium, very little oxidation can take place.

"During the repose that ensues a clarification takes place owing to the adherence of particular matter to the surface of the medium. After an interval of some hours the filter is emptied, the agitation involved generally resulting in dislodging a good deal of particular matter, so that the filtrate is at first turbid. Subsequently it clears more or less, and on analysis is found to contain traces of oxidised nitrogen, not because any material amount of oxidation has taken place in this particular bulk of sewage, but because it has washed out those oxidised products which were formed in the previous period of rest. Whilst, then, in the first and last phases the conditions are more or less favourable to the oxidation of the limited quantity of sewage held up in the filter, during the greater part of the time the position is very much that of the discarded continuous filter in which oxidation is hardly possible."

Constantly aërated continuous flow bacterial filters were introduced as improvements upon the Dibdin intermittent bacterial tank filters, by Colonel Ducat, Mr F. W. Stoddart, and others, but the most interesting is probably that known as the Thermal Aërobic Filter, a system introduced by Mr C. J. Whittaker (Pl. VII.). In this system an open septic tank is used and the tank effluent with what suspended matter it happens to contain is delivered to continuous flow filters by means of revolving sprinklers. The sprinklers are worked by pressure from a pulsometer, and the whole of the steam used in pumping the tank effluent on to the filters is condensed by the sewage, its temperature being raised thereby. During cold weather a supplementary steam-jet is turned in the pulsometer delivery pipe to maintain the temperature at any fixed point. Uniform conditions are thereby secured in the filter-bed, the body of it being raised to higher temperature than the surrounding atmosphere, and an air current so produced through it, securing desirable conditions for aërobic micro-organisms.

The following is a report of a trial of the system made for the Ribble Joint Committee in March 1899 by the author:—

"**Trials of the 'Thermal Aërobic' Filters at Coppy Clough.**—This system, briefly, is one which takes advantage of the anaërobic or purifying organisms to get rid of the sludge, and of the aërobic or oxidising organisms to get rid of the objectionable matter dissolved.

PLATE VII.]

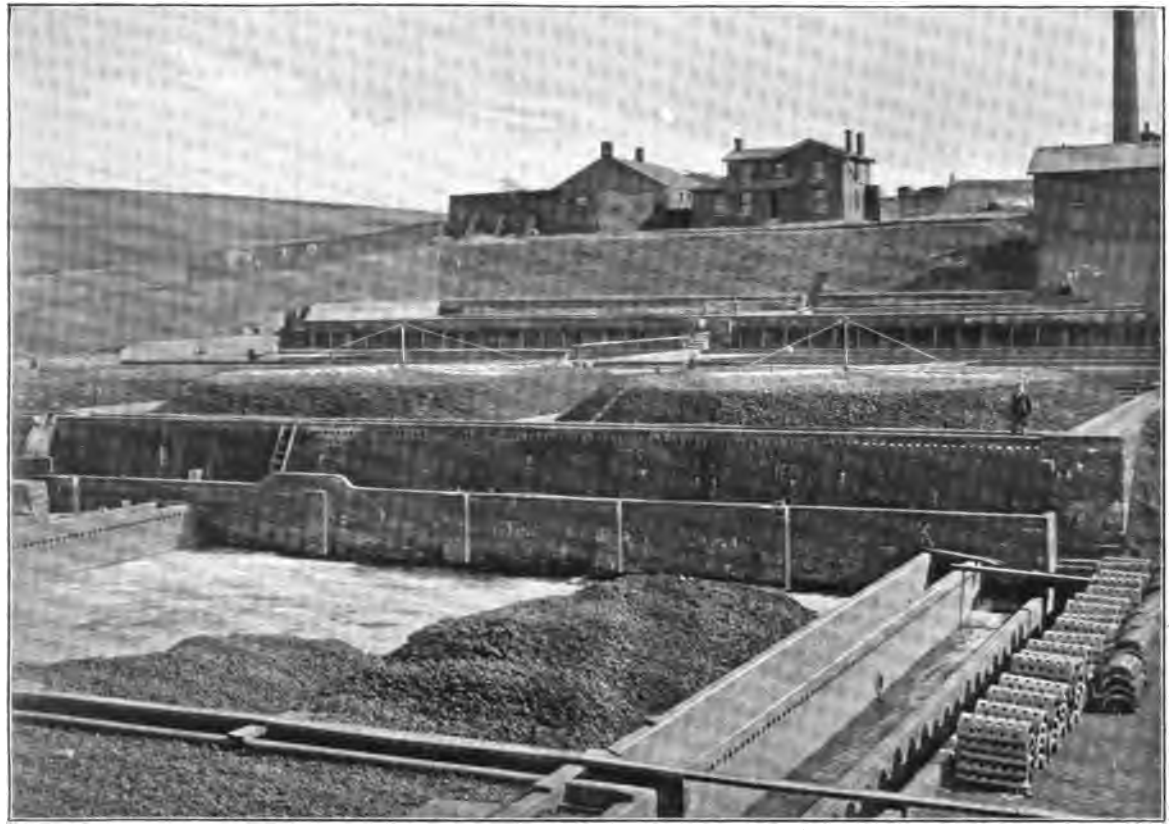

Thermal Aërobic Filters, Accrington Sewage Works.
Messrs Whittaker & Bryant, Engineers.

[*To face page* 132.

"To this end the sewage is received in an ordinary precipitation tank and treated with a small quantity of lime, which both assists the deposition of the sludge and produces alkalinity, conducive to the desired putrefaction.

"The sludge so deposited is not abstracted as usual, but allowed to remain in the tank and to putrefy. The whole of the contents of the tank so become one putrid mass, the fresh incoming sewage displacing the putrid liquid, which emerges as a tank effluent at the opposite end. This may be clear or otherwise, but in any event it is pumped to the filters by means of a pulsometer and delivered thereon by means of revolving sprinklers. In the act of being lifted its temperature is raised, the degree to which it is raised being dependent largely on the lift, or, in other words, to the steam used. If this happens not to be sufficient, then live steam is injected for purposes of heating pure and simple.

"The filters have a depth of 9 feet, and consist of a uniform mass of coke, broken to a 2½-inch ring.

"By referring to the tabulated sheet of results it may be seen that on January 25, 16,256 gallons were passed from the tank through the filters, and on the 27th, 41,306. The quantities were measured by the actual fall in the tank of the water line, after taking due precaution that the pump suction pipe should be the only outlet.

"This was at the rate of 325 gallons per yard per 24 hours on the former date, and 295 on the latter, taking the square filter area, and so including some portion unsprinkled, one-fifth of the total. If this be added, the working rate of the filter is 387 gallons per yard per 24 hours.

"On the first occasion the temperature was raised 5°·8 F., and on the second 9°·5 F. The tank effluent on the first occasion was, however, worse than on the second; in fact, the extra work to be done, as measured by the albuminoid ammonia, was about proportionate to the extra heat added.

Results in parts per 100,000.

	Albuminoid Ammonia.	Oxygen Absorbed.		Degrees Raised.
		Three Minutes.	Four Hours.	
January 25th, .	·41	1·0	4·2	5·8
January 27th, .	·57	1·31	4·07	9·5

"The final result in both cases was practically the same, and the method of treatment certainly has the commendation of being 'rational,' inasmuch as a fixed result can be aimed at, and neither more nor less. On the other hand, the bulk of the processes in use admit of no variation, and the result has to be accepted with thanks, be it good, bad, or indifferent.

"The final result, as judged by the albuminoid ammonia, can only be accepted as 'fair' according to the tabulation of the Joint Committee's results, but the effluent has the advantage of containing a large quantity of nitrogen as nitrates (average of the two trials, 2·13), which, with the albuminoid ammonia figure, precludes the idea of putrefaction or pollution.

"To make sure of this point the effluent was kept for five days at a temperature of 80° F., but at the end of that time it exhibited no sign of decomposition, and was clear and sweet.

"The incoming sewage of course bears no relation to the tank effluent passed on the filters, but was sampled and submitted to examination only with the idea of ascertaining whether the tank effluent was weaker than usual.

"Although weaker than the incoming sewage, as shown by the chlorine, 12·2 in the one case, and 8·5 in the other, the tank effluent cannot be said to be weak, the ammonia and absorbed oxygen figures borne in mind, but rather the incoming sewage to be strong.

"The filter effluent contained practically just the same burden of solids on its exit as on its entrance, but of course in a condition changed for the better, 79 and 73 in one case, and 83 and 77 in the other, evidence that the filter is not a mechanical strainer, but a chemical or bacterial transformer, delivering the whole of its charge, but in a changed condition.

"A great advantage would be some sort of mechanical strainer for the little suspended matter in the filter effluent, for though small in amount it affects the results to an appreciable extent. When devoid of this the albuminoid ammonia yielded is only ·08. It consists (as examined by Sir Edward Frankland's method) of 58·5 per cent. mineral matter, and 41·5 per cent. organic matter.

"This organic matter contained carbon 23·2 per cent., nitrogen 8·5 per cent., the latter due to 'organised' matter largely as seen under the microscope.

"On analysis, therefore, this organised or living matter appears worse than it really is, for the living 'animals,' worms, etc., not bacteria, are killed, and their bodies yield ammonia which counts in the ·16 parts per 100,000, otherwise ·08.

"The cost of the system only concerns this report, so far as its inclusion within the region of 'best known reasonable and available means' counts. If, as is stated, the amount of sludge is reduced to one-third, and the precipitants reduced to 15 grains per gallon of lime only, then the extra cost of coal for heating and pumping is more than saved. Whether the sludge and precipitants are so reduced could only be reported upon satisfactorily after at least one month's careful watching, but based upon the above, the comparative costs of treatment are as follows :—

PLATE VIII.]

W. Naylor, A.M.I.C.E., Engineer.

Farington Sewage Works, Preston Rural District Council.

[*To face page* 134.

"*Old Treatment*—

	£	s.	d.
Precipitants, 1 ton of lime and copperas, or alumina ferric, per million gallons,	2	10	0
Sludge, 40 tons per million, pressed to 8 tons dry, at 2s. 6d.,	1	0	0
	3	10	0

"*New Treatment*—

	£	s.	d.
Precipitants, 1 ton lime per million gallons,	0	10	0
Sludge, 13 tons per million, pressed to, say, 2 tons dry (will now contain less water),	0	5	0
Coal, per million gallons,	1	5	0
	2	0	0

"But, in conjunction with these figures, it is only fair to state that a good effluent was never obtained by the old method, although filters of considerable area were in use."

This last is probably the most satisfactory method of treating tannery waste, bereft of tan-pit liquors, which liquors require separate treatment (see page 143), except that it may not be necessary to pump the liquors in order to get sufficient head to drive the sprinklers. A form of sprinkler (the Caink-Candy) which can be driven by a head of twelve inches only, is shown, figs. 62 and 63.

A complete installation suitable for the treatment of tannery waste is shown in diagram 73 and Pl. VIII. It is really a scheme carried out by the author for the treatment of domestic sewage, but is quite fitting for the treatment of tannery waste.

The solids of a heavy nature are trapped at A′ after entering in the current of the whole volume at A; and after passing through septic tanks B, the whole passes *viâ* D on to the filters, F, which are served by sprinklers, G, and away by drain H. The sludge is removed at E by means of Fidler's apparatus, fig. 31.

Before leaving the subject of tanning it would be well to note that in this, as in many other trades, much improvement in the future, so far as prevention of rivers pollution is concerned, will be brought about by the adoption of processes or operations which will considerably reduce the actual volume of waste water turned out from the mills or factories. In this connection, an important improvement in the method of liming skins has been introduced by Messrs J. & E. Pullman and E. H. Payne.

In his lecture before the Society of Arts, April 24, 1899, Professor Proctor stated:—

"The chemistry of the liming process is by no means so simple as might at first sight appear. Its effects are not due to the chemical action of the lime alone, but also that of the enzyme products of bacteria, without which

TABLE (No. 1) SHOWING THE WORKING OF THERMAL AËROBIC FILTERS AT ACCRINGTON SEWAGE WORKS DURING TRIAL RUNS, 25TH AND 27TH JANUARY 1899.

Date.	Sample.	Period of Sampling.	No. of Dips.	No. of Temperature Observations (every 15 minutes).	Average t° F.	Maximum t° F.	Minimum t° F.	Amounts passed on to Filter.	Area of Filter.	Gallons per yard per 24 hours.	Units of useful heat, B.T.H.	Steam equivalent of utilised heat in lbs. total.	Coal equivalent of useful steam in cwts. per million gallons at 10 lbs. water evaporated per lb. coal.	Note.
1899.								Gallons.	Sq.yds.					
Jan. 25	Raw sewage, . .	4½ hrs.	19	...	...	...	...	16,256 in 2½ hours, = 6502 per hour.	480	325	942848	832	45·6 A	Each degree is equal to 885 lbs. of coal per million, heat radiated not included. Cost of coal per million— say, A, £1 ; B, 30s.
,, ,,	Top water in tanks, .	...	...	19	45·2	45·5	45·0	...	...	...	...	...	...	...
,, ,,	Tank effluent delivered from sprinklers,	4½ hrs.	19	19	51·0	51·5	50·7	...	...	...	...	...	...	...
,, ,,	Filter effluent, . .	4½ hrs.	19	19	45·6	46·0	45·0	...	...	...	...	...	...	...
Jan. 27	Raw sewage, . .	4½ hrs.	19	...	...	...	...	...	...	...	...	...	...	
,, ,,	Top water in tanks, .	...	...	29	48·5	48·5	48·5	41,306 in 7 hours, = 5909 per hour.	480	295	3924070	3458	74·5 B	
,, ,,	Tank effluent delivered from sprinklers,	4½ hrs.	19	29	53·0	57·2	51·7	...	...	...	...	...	...	
,, ,,	Filter effluent, . .	4½ hrs.	19	29	44·7	45·5	44·0	...	...	...	...	...	...	

TABLE (No. 2) OF RESULTS OF EXAMINATION OF RAW SEWAGE, TANK EFFLUENT, AND THERMAL AËROBIC FILTER EFFLUENT, TAKEN DURING ABOVE TRIAL RUNS.

All results in parts per 100,000.

Sample.	Date.	Albuminoid Ammonia.	Oxygen Absorbed.		Nitrogen as Nitrates and Nitrites.	Chlorine.	Solids.				
							Dissolved.		Suspended.		
			3 mins.	4 hrs.			Mineral.	Volatile.	Mineral.	Volatile.	
	1899										
Raw Sewage, . . .	Jan. 25	1·06	2·32	10·4	...	12·0	53	32	22	30	Raw Sewage incoming.
Tank effluent, . .	Jan. 25	·41	1·04	4·2	...	8·2	41	32	3	3	
Filter effluent, . .	Jan. 25	·160	·21	1·10	2·3	7·4	26	44	0	3	
Raw sewage, . . .	Jan. 27	1·92	3·1	16·3	...	12·5	50	36	19	30	Raw Sewage incoming.
Tank effluent, . .	Jan. 27	·57	1·31	4·07	...	8·8	49	29	1	4	
Filter effluent, . .	Jan. 27	·160	·25	1·28	1·96	9·2	43	31	1	2	
Filter effluent freed from suspended matter,	Jan. 27	·08	·25	·94	1·98	9·3	44	30	...	...	

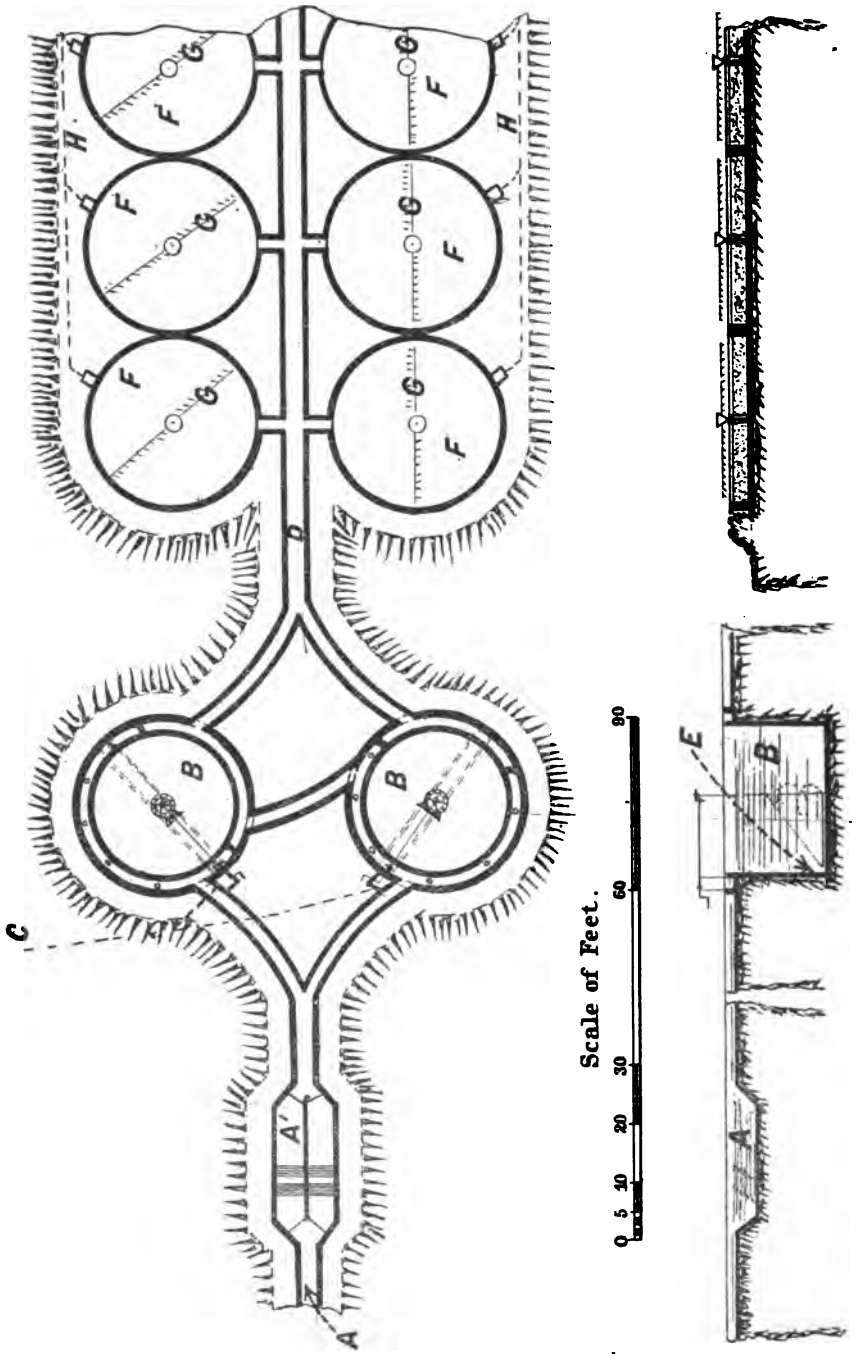

FIG. 78.—Septic Tanks and Thermal Aërobic Filters for treatment of Tannery Waste.

so weak an alkaline solution would have little solvent action on the epidermis structures. Sound sterilised lime hides will not unhair in any reasonable time by the action of lime alone, but if previous to liming they have undergone slight putrefaction, or been submitted to the action of the ferments of a putrid soak, or if a small quantity of such ferments is introduced into the lime liquor itself, unhairing will take place in a normal way. This has been clearly pointed out, so far as I know, for the first time by Mr Payne, Messrs Pullman's chemist, but it is confirmed by exact experiments made by Dr Parker.

"The effect of this combined action of bacteria and lime is to break down the epidermis matter of the skin, first into soluble forms identical with peptones or nearly so, and then into simpler and simpler products as time goes on, till we arrive at amines and amido-acids, often of the fatty series, and finally at ammonia, carbonic acid, and water. An old lime contains, in addition to the full quantity of caustic lime which it will dissolve, a large quantity of dissolved lime which is no longer caustic, but combined with weak organic acids, together with ammonia, peptonised hide substance, and a large number of living bacteria and their products, some of which are the solvent ferments or enzymes of which I have spoken. It therefore happens that, contrary to the usual belief of tanners, an old lime is much stronger than a fresh one in its solvent effect on hides, although it swells much less, since the enzymes have an effect like that of a pure liquor, directly opposed to swelling, and ammonia swells much less than lime, though its solvent effect is greater. The effect of such old limes is therefore to dissolve and loosen the fibrous tissue of the skin, giving poor weights and spongy leather, and where the limes are very stale there is great danger of injury to the grain by the direct action of bacteria. Absolutely new limes, on the other hand, swell the fibre well with very little loss of hide substance, but if the hides have not undergone any previous putrefactive action, they loosen the hair very slowly."

This goes to show that a new lime is more desirable than an old one, if only it can be brought into intimate contact with the skin in which putrefaction to some extent has gone on. With this idea in view, Messrs Pullman introduced a process of drumming the skin first with a solution of soda (such as caustic or carbonate) for about three hours only, and afterwards with a solution of a salt of lime (such as calcium chloride), the combined acid of which, leaving it for the soda, sets free caustic lime within the pores of the hide to exert its depilatory action. Many advantages are claimed for this process, and on the face of it it certainly appears promising. Assuming that the skins are limed as well as by the old method, from a rivers pollution point of view it is a great improvement. The patentees claim that—

(1) The process is cleaner, there being no lime 'slab' or sludge to pollute streams, clog sewers, or to be carted away.

(2) The process is quicker, since it can be completed in a few hours, according to the nature of hide or skin and result required.

(3) One-tenth of the space necessary for the old method is required.

(4) There is very great economy in labour.

(5) The process of liming is completed with one-twentieth the quantity of water.

(6) The natural grease of the hide is not, as in the ordinary liming process, transformed into an insoluble but into a soluble soap which is largely dissolved out, thus preventing the production of greasy leather.

(7) The structures of wool and hair are preserved, and the felting properties of both are materially enriched.

(8) The liming is so effected that, after hairing and fleshing (the lime being more easily soluble) the skins require less bateing or puiring and the hides less working and de-liming previous to passing to the liquors.

(9) The quantity of lime precipitated and combined can be regulated simply and accurately to suit any class of hides or skins; the skins cannot therefore be over-limed, even if left in the final solution for days, and in consequence strictly uniform results will always be obtained.

The following is a report on Messrs Pullman's process for liming hides and skins by Dr T. Gordon Parker:—

"At the request of Messrs John and Edward Pullman, I visited the works of Messrs R. & J. Pullman, Ltd., on the 11th January, in order to investigate the working of their new process for liming hides and skins.

"On my arrival at the tan-yard, a pack of salted Queensland hides, averaging 60 lbs., had been got ready for the process of soaking in water by the ordinary methods. I examined the hides, and considered that they were in a suitable condition for liming, freed from salt and other extraneous matters, and also soft and pliable. The pack was divided into two lots, one of which was treated in a drum, the second lot being treated in a paddle. No. 1 pack was now put into the first solution in a large drum, and slowly drummed in this for about two hours, at the end of which time they were thoroughly plumped up, were soft and soapy in feel, and exactly what one would expect from treating hides in such a solution as was used. I cut off a small piece from one of the hides at this stage, which was afterwards examined microscopically. It appeared to be in a healthy condition, the fibres were swollen and separated, but not in any way destroyed or damaged.

"These hides were now taken out of the drum and put into a second bath, which consisted of a solution in correct proportions, to produce, in conjunction with the materials used in the first bath, calcium hydrate (lime) in the interior of the hide. After drumming

in this second solution for about two hours, the hides were again examined, and it was found that by the joint action of the two solutions used, lime had been deposited in the interior of the hide and chemically combined with the hide substance. The hides appeared to be exactly the same in appearance and feel as the best lime hides would appear on being drawn from the last lime in any up-to-date tanyard. They were well pumped, firm, and appeared to be in a perfect and healthy condition. A section was cut from one of the hides and afterwards examined, both chemically and microscopically, in my laboratory; the fibres were thoroughly separated and in perfectly healthy condition.

"The solutions through which the hides had passed were examined, and found to contain no dissolved hide substance, only containing the usual substances which are removed from the hide by the action of ordinary lime. On the removal of the hair, the grain was firm, not drawn or loosened in any way; in fact, it would be impossible to distinguish these hides from any thoroughly limed pelt.

"Precisely the same results were obtained in experiment No. 2, which was carried out in a paddle instead of in a drum, the only difference being that the process took slightly longer, both in the first and second baths, and, as is only natural, the hides appeared slightly firmer.

"On the 20th January I again visited Messrs Pullman's works, Godalming, in order to see a pack of hides which had been in ordinary pits instead of being paddled or drummed.

"I watched these hides being unhaired, and examined them carefully. They were in an equally good condition to the packs examined on the 11th. The hides had a nice mild feel, a perfectly smooth and even grain, were firm and plump, and appeared most admirably suited for the manufacture of either sole or dressing leather. A sample of the hair was taken from both packs and examined microscopically. It was absolutely undamaged by the action of either of the chemicals, and perfectly suitable for felting, or any other purpose for which ordinary hair can be used.

"The pelt was examined, and found to contain the average quantity of lime, but, what I considered most important, was almost free from grease, the action of the solution in the first bath having saponified the natural grease of the hide, forming a soluble soap, which would be dissolved out. This, in my opinion, is a very important matter, as it does away with, or at least diminishes, the evil of greasy leather, a serious evil at some periods of the year.

"The process appears to me to be one of the most important improvements that has been recently introduced into the leather trade, because the process is applicable to every branch; and possesses, in my opinion, the following important advantages:—That the quantity of lime precipitated and combined in the hide may be regulated, simply and accurately, to suit any class of hides or skins; hides cannot be over-limed even if left in the final solution for days; that the natural grease of the hide is not, as in the ordinary liming process, transformed into an insoluble soap, but a soluble soap is first produced, which is largely dissolved out, thus removing the natural grease from the hides, and preventing the production of greasy leather; that the long handling and hauling process at present in vogue will be completely done away with, and by Messrs Pullman's process the heaviest hides may be limed and unhaired in from eight to twelve hours; the dangers of old limes and consequent destruction of pelt substances, meaning loss of weight, will be absolutely obviated. The process will save very largely in the quantity of water used in tan-yards. In some districts this will prove a great blessing, and thus what is now getting such a serious matter, the quantity of sewage from the tan-yards, will be materially decreased, as it is the lime liquors which are usually the most objectionable in the pollution of rivers and streams, and so strongly objected to by the local authorities at sewage outfalls. The space required for the process will be much smaller; one pit will serve where by the present process ten or more are in use; and at the same time the cost of the process would be materially cheaper than the present process of liming; and last, but not least, the quality of the pelts produced would always be identical, provided the materials are weighed out correctly. This is a most simple matter, as the materials can be bought in liquid form of known strength, and the proportions can by any intelligent workman be measured out accurately; even a slight error in the proportions used would not have a serious effect. The pelt would thus never be over-limed or under-limed, as at present is frequently the case. Lime speck, lime blast, lime burns, hook scratches and the many other common flaws due to carelessness in the present process, can be absolutely obviated, and there will be no lime slab, which is frequently a serious nuisance to get rid of. Another point which is also of importance, is that the process can be used with impure water, an especial advantage being that when used with water contaminated with iron the iron is precipitated out, and no evil effects of it communicated to the leather.

"I was also shown at Messrs Pullman's works several different classes of skins which had been treated by the same process, which proved to me that it was equally suitable for any class of skin or hide, from the lightest to the heaviest, a piece of walrus being an example of the heavier class. This was thoroughly limed and free from grease.

"In conclusion, from careful observation, examination of the pelt, both before and after, and also of the liquors used, I am strongly of the opinion that the process will prove a valuable one to the leather trade in general, that the cost of production will be reduced and the leather improved in quality.

"I consider the process very simple, perfectly reliable, and entirely novel."

It is possible that in the neighbourhood of paper and bleachworks the waste soda liquors from the one and waste $CaCl_2$ liquors from the other may be utilised advantageously in the above process of liming.

The liquors from the tan-pits are sufficiently objectionable both in character and appearance to call for special treatment. When they are re-used as far as possible and the volume kept low, a Kestner evaporator as described in Chapter VIII. might be adopted advantageously for the purpose of getting the liquors sufficiently dense to permit of their being carried away to the manure heap.

Where the volume is too great to permit of this, precipitation by means of alumina sulphate—not alumina-ferric, which causes a black discoloration due to iron and tannic acid—might be resorted to, and followed by a separate 'septic' or decomposing tank and bacterial filters as in fig. 75. From trials made by the author, he is led to believe that a different type of organism is cultivated on separate filters used in this way, as such filters *in toto* give far better results per square yard than a single filter treating a like quantity of the liquors mixed proportionately.

CHAPTER V.

BREWERY AND DISTILLERY WASTE.

THE waste liquids discharged from breweries are due to the washing of returned casks (many of which contain old beer, hops, etc.), and the various utensils, plant and floors; for no one knows better than the successful brewer that absolute cleanliness is essential to the production of good beer.

Before little or anything was known of 'wild growths' by aërial infection, brewers practised, and valued, cleanliness from experience; and the careful washing of mash tuns, hop backs, coolers, fermentation vats and barrels has always been an important part of brewery work.

These waste wash liquors are loaded with vegetable organic matter of a fibrous or cellular character in suspension, with albuminoid bodies, the various transformations of starch due to inversion by diastase, like enzymes, and fermentation by yeast, as well as with artificial dextrose where such malt substitutes are used, in solution, in addition to the usual scouring and fining agents, both in solution and suspension.

The waste discharged by distilleries, pot ale principally, or beer from which the alcohol has been distilled, has much the same character but is more concentrated. In both cases the earliest contribution to the drains (malt steeping omitted) after the washing of hot or cold (clean water) tanks is the washing of the mash tun. A residual portion of both wort and grist, or grains, together with any cleaning agents, form the burden of this.

An analysis of the wort itself may be taken as given by Heron,* as follows:—

	Percentages calculated on the malt.
Maltose,	39·01
Dextrine,	13·70
Malt extract carbohydrates,	9·55
Albuminoids, etc.,	10·64
Insoluble (grains, etc.),	27·10
	100·00

* *Journ. S. C. I.*, vol. vii. p. 258.

The malt extract carbohydrates (cold water extract) were found by O'Sullivan to consist of—

Cane sugar,	4·4
Maltose,	3·15
Dextrose,	2·25
Levulose,	1·10

The mash tun wash is naturally a dilution of the wort, and a sample of such drawn from the Spring Clough Brewery, Barrowford, gave the following results on examination :—

	Mineral.	Volatile.	Parts per 100,000.
Suspended solids,	5	71	76
Dissolved solids,	170	1474	1644
Rotatary angle 200 mm. tube,			2·86°
Copper oxide reduced per 100 c.c.,			·939 grms.
Maltose per 100 c.c.,			·681 ,,
Dextrine per 100 c.c.,			·17 ,,

The above figures cannot be considered quite correct, because of the undoubted presence of other bodies possessing optical activity, but only as an indication of the approximate quantity of starch products liable to yield acetic, lactic or other acids, to be referred to hereafter. The sample was not inverted before examination, so that any unchanged starch carried forward by the wort may reach the waste liquors eventually from the finings of the finished beer.

The relative volumes of the liquors were,
per 100 gallons brew in

	Brewery A. Barrels.	Brewery B. Barrels.	Brewery C. Barrels.
Washing of hot liquor backs, Washing of cold liquor backs,	5	4	4
Cleaning out mash tun,	4	...	...
Copper wort pipes,	2	15	17
Two wort backs,	3	...	...
Copper, including last runnings from mash tun to save copper during raking of fires,	25	20	20
Hop back, pumping back, Wort pumps,	8	15	18
Cooler and refrigerator,	9	20	16
Fermenting tuns, yeast back and yeast press,	8	16	20
Settling backs,	2	4	4
Floors upstairs,	4	10	10
Racking room,	3	5	5
Sundries,	10	...	...
Casks, first washings,	30	50	40
Casks, second washings,	30	50	60
Casks, steaming and outside washings,	100	20	80
Total waste in gallons per 100 gallons brew,	9108	8604	10,944

The washing of the copper is the next source of waste, and results of examinations of liquors from this as well as from the mash tun and other sources—the hop back, the coolers, refrigerators, fermentation vats, settling racks, floors and return casks—are here given :—

	Parts per 100,000.						CuO reduced per 100 c.cs.	Maltose calculated on CuO.	Rotatory angle in 200 mm. tube.	Dextrine by difference.	Action on Litmus.
	Suspended Solids.			Dissolved Solids.							
	Mineral.	Volatile.	Total.	Mineral.	Volatile.	Total.					
Washing from mash tun,	5	71	76	170	1474	1644	·939	·681 (angle due 2·11°)	2·86	·17	Slightly acid.
Washing from copper,	34	25·5	59·5	80	44	74	Nil	...	0	...	Neutral.
Wash of hop back,	108	119	227	18	52	70	Nil	...	0	...	Neutral.
Scouring of cooler and refrigerator,	2·5	10·5	13	774	130	904	Nil	...	0	...	Strongly alkaline.
Fermentation and racking vat,	17	24	41	80	166	246	Nil	...	0	...	Acid.
Cask washings, first time,	19	204	223	106	638	744	·203	·147 (angle due ·55°)	1·32	·17	Acid.
Cask washings, second time,	19	18	37	20	76	96	Nil	...	0	...	Neutral.

In the cases of distilleries by far the greater volume of the waste is the pot ale, although in cases where the grain is malted, and these are numerous, the steep water is considerable, as are also the 'spent lees' and 'lime washing' from the rectifiers and tun rooms respectively.

The following are the total volumes yielded at eleven representative distilleries on the Spey, Scotland :—

Gallons per Week.

No.	Pot Ale.	Steep Water.	Spent Lees.	Lime Wash.
I.	50,000	25,000	30,000	20,000
II.	30,000	10,000	11,000	5,000
III.	24,000	20,000	7,000	35,000
IV.	58,000	36,000	21,300	40,000
V.	29,000	18,000	10,650	15,000
VI.	27,500	6,000	6,510	3,600
VII.	27,500	6,000	6,510	3,600
VIII.	30,000	40,000	15,000	15,000
IX.	10,000	15,000	6,000	1,000
X.	25,000	16,000	8,000	8,000
XI.	31,000	18,000	4,000	18,000

The average distillery, therefore, may be considered to discharge about the same volume of waste liquors as the average brewery, namely, 15,000 to 25,000 gallons per day, and almost any method of treatment is applicable to both if to one.

From the foregoing analyses it will be seen that the objectionable constituents of brewers' and distillers' waste are largely of an organic character, and it was shown in the chapter on Tanning and Fellmongering that the most advantageous method of purifying these is by treatment on bacterial filters, either aërobic or anaërobic.

Almost all, if not entirely all organic bodies are subject to bacterial degradation if in neutral environment. But in the cases of starches and starch derivatives *in contact with the atmosphere*, acids are generally produced which prevent the activity of nitrifying organisms. The atmosphere generally, and particularly that in the vicinity of breweries, is charged with organisms which when brought in contact with starch or starch products will yield acids as the result of their existence.

Percy Frankland (*Thorpe's Dict.*, App. Chem.) states: "In practice a large number of substances undergo spontaneous lactic fermentation. Thus besides milk and the various forms of sugar, sorbite, mannite, dulcite, and inosite are all transformed into lactic acid, as is also calcium malate. Lactic fermentation frequently occurs in the manufacture of starch, and is one of the chief dangers in the preparation of beet sugar. It has also to be contended against in the alcoholic fermentations, and it probably plays an important part in the leavening of bread.

"The ferment, which is very widely distributed, may be conveniently

obtained either by allowing milk to stand several days, or by exposing the following mixture:—

Cane sugar,	9 parts
Glucose or mannite,	10 ,,
Decomposing cheese,	1 part
Chalk,	10 parts

"*B. amylobacter* (anaërobic) produces butyric acid and is said to ferment starch and also arabin and lichenin."

Fitz (Ber. 1878, 44 and 53) found that 100 parts starch suspended in a solution containing the necessary salts yielded with the *B. ethylicus* at 40° C.—

Butyric acid,	34·7 parts
Acetic acid,	5·0 ,,
Succinic acid,	·3 ,,
Ethylic alcohol,	1 part

and a trace of normal butyric alcohol.

Boutroux (*Comptes Rendus*, cii. 924) describes a formation of acid $C_6H_{12}O_8$ from the fermentation of glucose, to which he gives the name of oxygluconic acid.

It is to ferments of this character that the souring of beer, pot ale, and brewery refuse generally is due. Indeed it is difficult to keep brewery refuse free from 'souring' even a few days. In referring to the acidity of pot ale, Mr R. W. Lang * records that "On investigating the pot ale itself, aldehyde was detected, the older samples containing the larger amount, while further analyses proved the presence of lactic acid, succinic acid, and a doubtful quantity of acetic acid."

The amount of alkali required to neutralise the free acid in the liquor at different stages was determined.

25 c.c. of the solution were taken, made up to 200 c.c. with water, and titrated with standard sodium carbonate, phenolphthalein being the indicator employed.

100 parts of	(1) fresh pot ale	required	0·3488 grms.	Na_2CO_3.
100 ,,	(2) sample 10 days old		1·272 ,,	,,
100 ,,	(3) sample 40 days old		1·94 ,,	,,

The composition of the pot ale was—

	Grains per gallon.
Total solid matter (soluble portion),	2191·0
Ash,	505·0
Phosphoric acid,	139·3
Saline ammonia,	7·0
Albuminoid ammonia,	62·3
Sugar,	28·0
Carbohydrates, aldehydes, and organic acids (lactic, succinic),	1030·0
Oxygen absorbed in four hours,	89·0

* *Journ. S. C. I.*, vol. xviii. p. 239.

In the treatment of such waste the author found that at most breweries this acidity was not overcome easily. At Messrs Allsopp's Brewery, Darwen, a system of strainers and filters was put down as shown in plan and section (fig. 74).

The filter consisted of sand and 'magnetic carbide.' Good results, however, were never obtained, the following actual extract from the Ribble Joint Committee's Report, July 1898, being a fair specimen of the whole :—

Description of Sample.	Date.	Albuminoid Ammonia, parts per 100,000.	Oxygen Absorbed. 3 minutes.	Oxygen Absorbed. 4 hours.
			Grains per gallon.	
Filter effluent, .	June 6, 1898	·208	·87	1·40
Filter effluent, .	June 9, 1898	·228	1·08	2·15
Filter effluent, .	June 28, 1898	·160	·51	1·90

"These samples have evidently not been sufficiently filtered. Though clear and colourless at the time of drawing, they soon became foul, and deposited a very objectionable black sediment. The sample drawn on the 9th June was examined in further detail, the results being as follow :—

	Parts per 100,000.
Suspended solids, ...	2·0
Total volatile solids, ...	19·0
Total mineral solids, ...	29·0
Mineral solids contained—	
Silica, ...	5·0
Iron and alumina, ...	15·9
Sodium and potassium chlorides, ...	5·0
Sulphuric anhydride (SO_3), ...	1·0
	26·9"

At the Clough Vale Brewery, Barrowford, Colne, a similar plant was put down with the same unfortunate result.

At the Anglo-Bavarian Brewery, Shepton Mallet, a very extensive purification plant is in operation, consisting of cooling arrangements, precipitation tanks (alumina ferric being used as precipitant), sludge presses, and magnetic carbide filters, but the result is anything but satisfactory. The final effluent is discharged into the sewers of the Urban District Council, and the effect on the treatment at the sewage farm has been disastrous, a bad effluent, rivers pollution, and constant threats of litigation being the result.

There is evidently no possibility of preventing the acid fermentation in

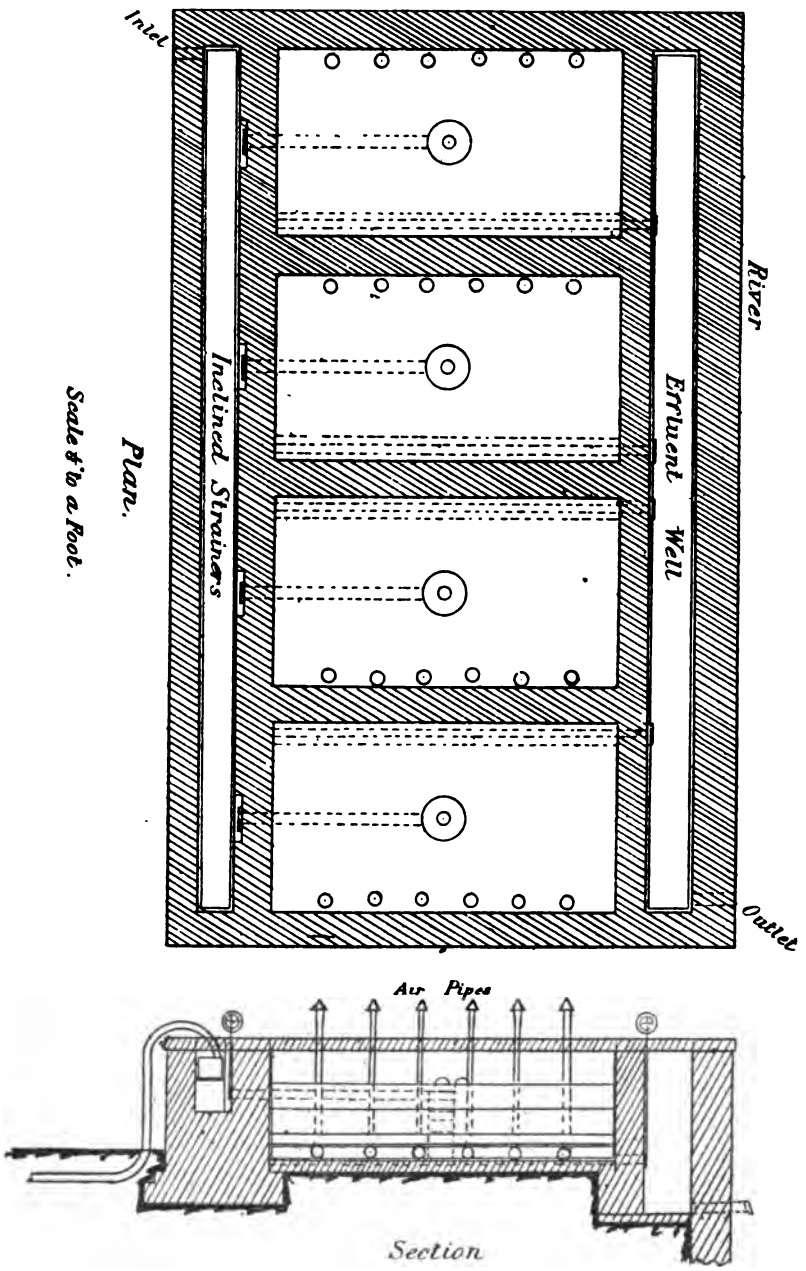

FIG. 74.—Magnetic Filters, Messrs Allsopp's Brewery, Darwen.

untreated liquors, for from the very fact of atmospheric contact this must arise, as is shown by the following experiments by Dr G. H. Moritz :—*

"Samples were taken in sterilised flasks, at different stages, of a brew of a light mild ale, with hops in the copper at the rate of 2·22 lbs. per barrel, as follows :—

A. Directly from the mash-tub taps, at a temperature of 154° F. (grav. 1041·1).

B. Directly from the copper, 15–30 minutes after the wort broke through (grav. 1078·7).

C. Directly from the copper after 2½–2¾ hours' boil, and immediately before the coppers were let go (grav. 1087·6).

D. After the worts had been exposed on the coolers and refrigerators for some time.

All the samples were forced at 80 to 85° F., and examined from time to time with the following results :—

At the end of forty-eight hours—

A. Swarming with bacilli and bacteria.

B. No trace of organisms.

C. No trace of organisms.

D. Fermenting briskly, and the sediment showed *Sacch. apiculatus Pastorianus*, and *ellipsoideus* forms, together with bacteria and micrococci.

At the end of ten days—

A. As before, the organisms were sporulating freely.

B. No trace of organisms.

C. No trace of organisms.

D. Still fermenting briskly, with various forms of yeast and bacteria. The liquid contained 2 per cent. by volume of alcohol.

At the end of forty-four days—

B. } Still absolutely free from organisms.
C. }

D. Still fermenting slightly ; 7·04 per cent. of alcohol present.

After sixty-nine days—

B. } Still absolutely free from organisms.
C. }

D. Still fermenting slightly ; 7·79 per cent. of alcohol present.

"The experiment was interrupted at this point, and a small quantity of wort, fresh from the mash tun, was added to each flask of B and C ; in forty-eight hours all the flasks contained a large number of bacilli and bacteria.

"We learn from this experiment, firstly, that the wort as it left the mash tun contained a large number of organisms and spores capable of development ; secondly, that fifteen minutes' boiling in the copper was sufficient to arrest the growth of these organisms ; and thirdly, that the wort, before entering the fermenting vessels, contained a vast number of germs capable of development in hopped wort."

The application of brewery waste or distillery waste to land was recommended by the Rivers Pollution Commissioners, 1868, and when applied in only small quantities the natural bases of the soil will no doubt in a large measure neutralise the acidity. But when applied in large quantities, as at Burton-on-Trent, even the addition to the soil of lime as an additional base has not resulted in either a satisfactory effluent or freedom from nuisance.

* *Laboratory Club Transactions*, vol. iii. No. 2.

Parts per 100,000.

Description.	Dissolved Matters.						Suspended Matters.		
	Total Solid Matter.	Organic Carbon.	Organic Nitrogen.	Ammonia.	Nitrogen as Nitrates and Nitrites.	Total combined Nitrogen.	Mineral.	Organic.	Total.
Pot ale or spent-wash from Soucil Distillery, Paisley, July 21, 1870,	3937·8	1705·705	237·300	18·05	0	252·200	83·6	3337·2	3420·8
Pot ale from Harvie's Distillery, March 15, 1872,	2895·5	1000·808	204·120	9·00	0	211·532	5·30	277·60	282·90
Spent lees from Harvie's Distillery, March 15, 1872,	18·4	2·219	·385	·350	0	·672	·17	·29	·46
Drainage from Macfarlane's Distillery, Port Dundas, March 19, 1872,	1300·6	381·173	108·503	9·550	0	110·603	5·10	114·00	119·10
Average London sewage, .	64·5	4·386	2·484	5·557	0	7·06	24·2	20·5	44·7

Parts per 100,000.

Description.	Dissolved Matters.						Suspended Matters.		
	Total Solid Matters.	Organic Carbon.	Organic Nitrogen.	Ammonia.	Chlorine.	Total combined Nitrogen.	Mineral.	Organic.	Total.
Permitted by proposed standards of purity,	Unlimited	2·00	·300	Unlimited	Unlimited	Unlimited	3·00	1·00	...
Distillery waste used for irrigation at the Parkhouse Farm, March 16, 1872,	443·6	25·0	60·599	15·250	35·00	73·158	76·04	267·84	343·88
Effluent water from Parkhouse Farm, March 16, 1872,	32·4	2·050	·503	·850	2·85	1·203	4·74	2·46	7·20

The results given by the Commissioners (page 152) of the examination of distillery waste both before and after successful treatment on land are interesting only where there is an abundance of such land.

Now when wine is just beginning to sour, to the annoyance of the vintner, it is often remedied by the addition of sugar, and fermentation started afresh. That is to say, the activity of one micro-organism is arrested by the introduction of media suitable for the rapid development of other competitive forms.

On this principle the author patented and put in practice a method of treating this class of waste. Putrid sewage, or sewage sludge, is introduced, the active anaërobic organisms in which come into competition with the acid producing bacteria, and in a short time the action of the latter ceases; moreover, the ammonia and other unstable compounds in the sewage neutralise the acids if already present, the resulting putrid liquid becoming quite amenable to treatment on bacterial filters.

The treatment as a whole is similar to the septic treatment, but the 'septic' tank is in this case not used for the purpose of liquefying sludge, but for that of rendering inert the acid forming organisms. It is therefore better described as an anti-souring tank.

A small scale trial * was first made with about forty gallons of pot ale, the following results being obtained:—

RESULTS FROM TREATMENT OF POT ALE IN ANTI-SOURING TANK AND BACTERIAL FILTER.

Parts per 100,000.

Sample.	Free Ammonia.	Albuminoid Ammonia	Chlorine.	Nitrogen as Nitrates and Nitrites.	Total Solids.		
					Mineral.	Volatile.	Total.
I. Crude pot ale (sour), .	8·1	5·5	38·8	...	210	2385	2595
II. Same, neutralised with lime,	7 1	5·4	40	...	670	2815	3485
III. Passed through tank containing sewage. (No analysis.)	...	...	...	...	...	...	...
IV Tank effluent from III.,	7·1	5·4	26·6	0	215	860	1075
V. Bacterial filter effluent, first time,	·28	·64	26·8	3·1	175	70	245
Bacterial filter effluent, second time,	·26	·15	25·1	·8	162	41	203

* As described by the author in a paper presented to the Inst. C.E., Feb. 1902.

The crude distillery waste was then passed through the same filter without a previous mixing with sewage, but no real purification took place. A decomposition and sedimentation, accompanied by a souring, continued right up to the fifteenth or sixteenth filtration, but at the end it was black and offensive. It appeared evident, therefore, that the presence of the bacteria in putrid sewage had some effect in preventing acidification, as in the case of the vinous secondary fermentation, and a trial was then made with starch paste only. About twenty pounds of starch were mixed with ten pounds of water, forming a paste. Half of this was mixed with putrid sewage sludge and allowed to stand one day and then examined. After the expiration of five days a further sample was examined and the mixture then passed through a bacterial filter previously matured by means of sewage only. From the table of results it will be observed that after one day's standing the difference in the composition of the mixture is little more than that due to the dilution or experimental error. After the expiration of five days, however, the change is decided. The copper oxide reduced amounts to less than one half, as does also the rotary angle. There had been, therefore, a decomposition of starch to the extent of one half or more. The remaining portion of the paste, unmixed with sewage, was unchanged in appearance, and gave practically the same figures on immersion as on the first day, but smelled offensive.

After passing the mixture, five days old, slowly through the filter once, the copper oxide was reduced to less than one-tenth and the rotatory angle to less than one-half. The albuminoid ammonia, due of course to the added sewage, was then estimated for the first time and stood at ·16. The liquid was filtered again up to the fifth time, the operation extending over about two working days, and the table shows the changes in each successive filtration.

The other portion of the paste had now become sour and stinking, but otherwise thick, slimy and grey, as at first, and was passed into the filter; but up to the twenty-first filtration a satisfactory effluent was not obtained, and the activity of the filter impaired if not destroyed. The effluent was turbid, soured on standing, and gave a blue coloration with iodine, indicative of unchanged starch.

About this time Mr John Stanning, the general manager of the Bleachers' Association, Ltd., was anxious to improve the condition of the effluent at the Leyland works of the company (the purification plant at which is described in Chapter VI.), for the purpose of re-using all the effluent within the works.

The author, on the success of the experiment before described, suggested treating the worse liquors only in the same manner, and an attempt was made with kier liquors. These only amount to about 20,000 gallons per diem, but as they are produced by boiling the raw cloth first with lime and afterwards with soda, they are very foul and concentrated, apart from the

RESULTS OBTAINED ON TREATING STARCH PASTE BY ANAËROBIC DECOMPOSITION FOLLOWED BY AËROBIC FILTRATION.

No.	Sample.	Calculated Strength.	Cupric Oxide reduced after Inversion per 100 c.cs.	Dextrose equivalent of CuO.	Rotary angle (200 mm. tube).	Dextrine by difference.	Ratio of Dextrine to Dextrose.	Total Solids. Mineral.	Total Solids. Volatile.	Chlorine.	Free Ammonia.	Albuminoid Ammonia.	Nitrogen as Nitrates and Nitrites.	Remarks.
			Grms.	Grms.	Degs.	Grms.		Parts per 100,000.						
1	Starch Paste (10 lbs. to 50 pounds water),	2% Starch added* = 1·6% calculated on dry Starch.	2·60	1·2	1·76	·10	1/12							
2	Mixture of starch and sewage sludge, one day's standing,	1·58% Starch added = 1·26% on dry Starch.	2·40	1·1	1·65	·09	1/12							
3	Same after five days' standing,	...	1·03	·47	·88	·08	1/6	140†	700	...	2·34	·16	...	
4	Filtrate I. first time, .	...	·19	·09	·44	·08	1	150	202	8·0	·032	·16	1·0	Slowly passed through 3-feet filter once.
5	Filtrate II. second time,	...	·08	·037	·15	·03	1	140	72	8·5	...	·105	·5	Do. do.
6	Filtrate III. fourth time,	...	·01	·005	...	...	...	130	34	8·5	...	·120	...	Do. twice.
7	Filtrate IV. fifth time,	...	·0	·0	...	...	...	153	41	10·0	...	·116	...	Do. once.
8	Figures for 7 calculated on chlorine 8 parts,	...	...	...	...	...	...	112·4	32·8	...	...	·093	...	...

* Paste not quite uniform.
† Slightly acid reaction.

strong alkalinity, nearly 1·10 normal. The most objectionable feature on the face of the experiment was the comparatively extreme alkalinity. But in face of the difficulty experienced in preserving the alkalinity of exposed liquors, and knowing the derision with which practical manufacturers would receive a process of impounding, sprinkling and filtering alkaline liquors for any purpose and yet retaining the alkalinity, the trial was proceeded with.

Eight parts of kier liquor were mixed with one part wet sludge sewage and allowed to stand one week. The table shows the reduction in alkalinity, the only noticeable change due to standing.

But after being sprinkled over a three-foot filter of broken clinkers, previously brought into condition by sewage, three times, the change was remarkable, inasmuch as the albuminoid ammonia was reduced to nearly one-quarter and the effluent clear and neutral in reaction.

The table on next page shows also the effect of two weeks' standing, but the advantage is not so great as to justify the expenditure involved in extra tank accommodation. A less amount in capital expenditure devoted to extra filtering area would probably give better results.

A sample of crude old beer was then sprinkled over a bacterial filter three feet deep up to the twenty-third time, the loss due to evaporation being continually made up with water, but on each successive filtration the filtrate was sour, and though a considerable change was effected in the liquor, at the finish it was brown, deeply coloured, muddy in appearance, sour and offensive. Another sample was taken and allowed to stand for five days in contact with one-fifth its volume of wet putrid sewage sludge from a septic tank, and then passed through a filter—sprinkled. The table, page 160, shows results of this, in which it may be seen that after the second filtration both the optical activity and the copper reducing power have disappeared, and that the fifth filtrate is an excellent effluent, showing a reduction in total solids from 3200 to 200. The effluent was clear, sweet, colourless and neutral, but contained a small amount of suspended matter. Five filtrations may appear an excessive number, but it must be borne in mind that brewery waste would only be about one-fifth the strength of crude beer, and distillery waste about half to one-third.

At the Hook Norton Brewery Company's Brewery, Hook Norton, Banbury, a settling tank and continuous flow sand and gravel filter had been used, but with little success, during the six years ending 1898. It was then tried intermittently, with no better result, and on the suggestion of the author the plant was remodelled as shown in figs. 75 and 76. The flow is reduced, by eliminating all clear water, to about 12,000 gallons per day of strong liquor. This is impounded in a settling tank for not less than twenty-four hours in contact with putrid sludge from sewage, or a flow of 5 per cent. domestic sewage is admitted, and when the putridity has once been established, sewage sludge is no longer necessary, though a small and constant supply of sewage is desirable. The contents of this tank, the 'anti-souring' tank, are pumped

Results of Examination of Sample of Kier Liquor from Messrs Stanning & Son, Leyland, and same after Treatment.

Parts per 100,000.

Nature of Sample.	Date.	Dissolved Solids.			Suspended Solids.			Albuminoid Ammonia.	Oxygen Absorbed.		Chlorine.	Nitrogen as Nitrates and Nitrites.	Alkalinity (c.c. of normal acid required per 100 c.c.).	Remarks.
		Mineral.	Volatile.	Total.	Mineral.	Volatile.	Total.		3 min.	4 hours.				
Raw liquor, . .	July 1900.	570	360	930	1·6	2·0	3·6	...	...	...	38·4	...	8·6	
Mixture (8 parts of Kier liquor to 1 part of wet sludge), after standing one week,		530	350	880	26·0	66·0	92·0	4·08	14·5	105·2	35·1	...	5·8	Ammonia and oxygen absorbed estimated on clear liquor.
Filtrate, . . .		450	231	681	3·6	1·8	5·4	·160	·6	2·24	*37·4	37·2	Neutral	Passed through 3-feet filter three times.
Filtrate from mixture after standing two weeks,		480	204	684	...	...	...	·120	1·08	2·02	38·3	34·8	Neutral	Do. do.

* Original volume maintained by addition of water.

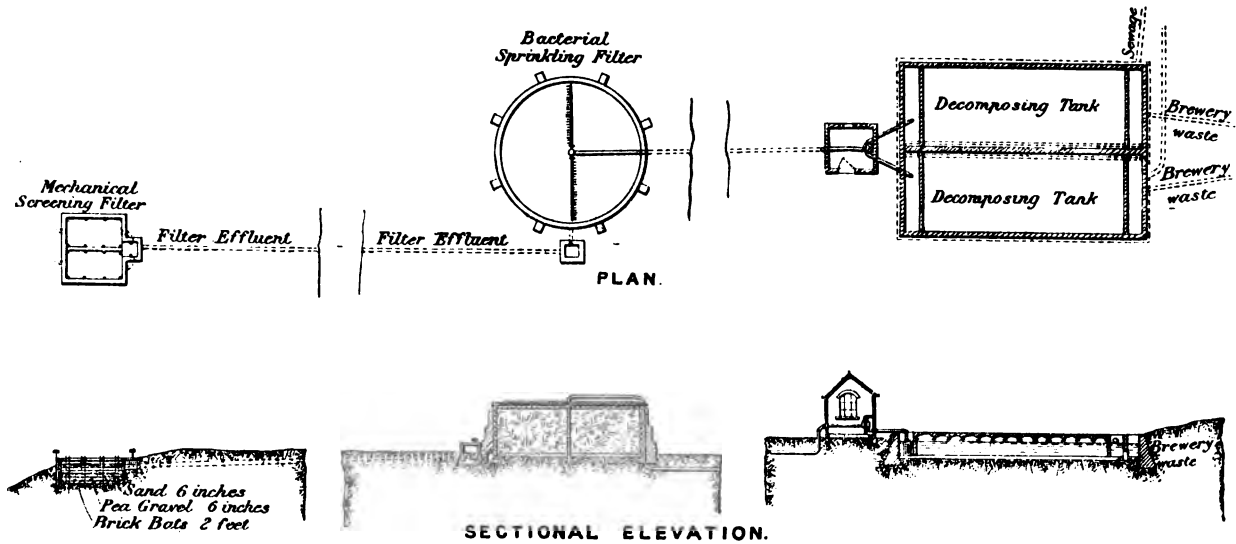

W. Naylor, A.M.I.C.E., Engineer. *Scale* 1 *inch* = 40 *feet.*

FIG. 75.—Hook Norton Brewery Co.'s Purification Plant.

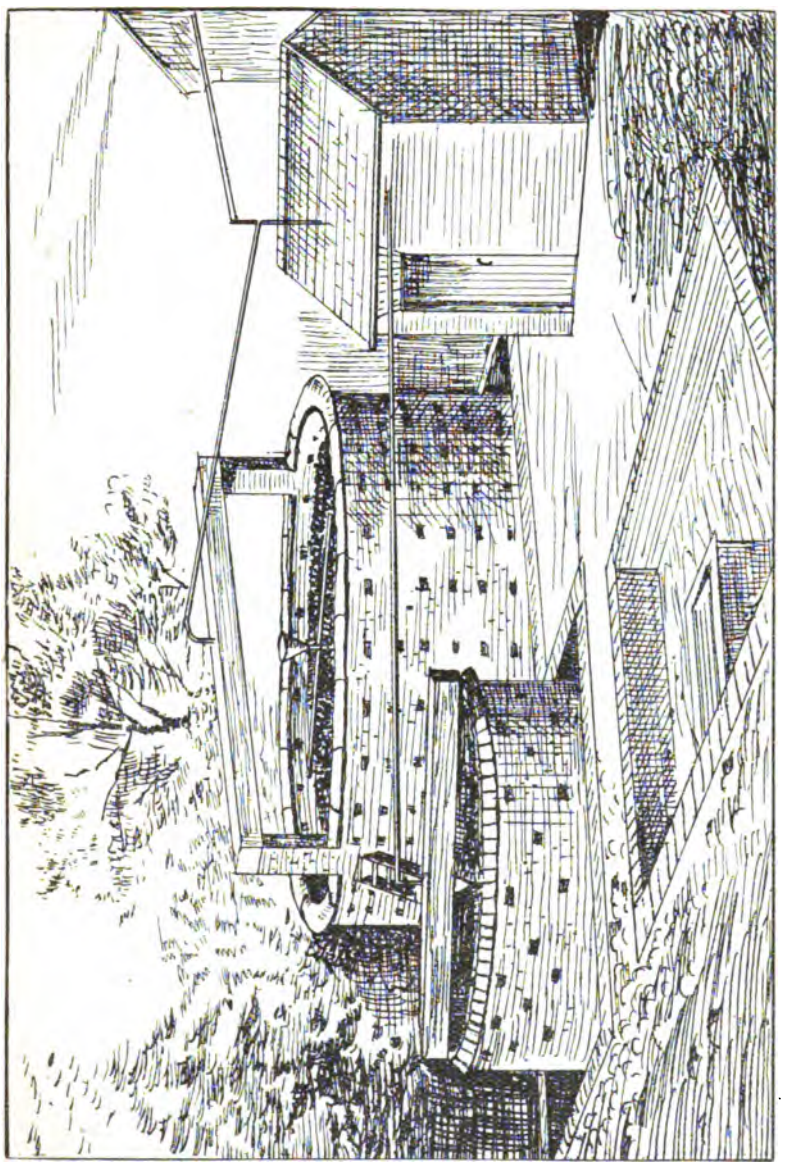

FIG. 76.—Hook Norton Brewery Purification Plant.

RESULTS OBTAINED ON TREATING MIXTURE OF CRUDE (OLD) BEER AND SEWAGE ON BACTERIAL FILTER—SPRINKLED.

No.	Sample.	Cupric Oxide reduced per 100 c.c.	Maltose calculated on CuO reduced.	Rotary angle (200 mm. tube).	Dextrine by difference.	Ratio of Dextrine to Maltose.	Total Solids.		Total Suspended Solids.	Free Ammonia.	Albuminoid Ammonia.	Nitrogen as Nitrates and Nitrites.	Chlorine.	Remarks.	
							Mineral.	Volatile.							
		Grms.	Grms.	Degs.	Grms.		Parts per 100,000.								
1	Crude beer, ...	·519	·377	4·4	·73	1·9 to 1	247	3032	690	...	...	...	...		
2	Mixture of beer and sewage sludge ($\frac{1}{5}$ vol. wet sludge) after standing five days,	·279	·202	2·3	·37	1·8 to 1	202	1458	254	16·2	8·0	0	...		
3	Filtrate I. after filtering first time, .	·095	·069	·66	·101	1·4 to 1	186	424	...	2·9	3·12	0	10·0	Passed through 3-feet filter slowly, twice.	
4	Filtrate II. after filtering second time,	·071	·0326	0	...	...	182	28[illegible]	...	·72	2·35	0	10·4	Do.	do.
5	Filtrate III. after filtering third time,	·015	·0072	0	...	...	188	116	...	·320	1·09	0	11·2	Do.	do.
6	Filtrate IV. after filtering fourth time,	...	...	...	...	...	186	94	..	·24	·80	0	12·0	Do.	do.
7	Figures for 6 calculated on chlorine, 10 parts,	...	...	...	...	...	155	78·2	..	·20	·66	...	...		
8	Final filtrate, fifth day, . . .	...	...	...	...	...	250	85	...	·68	·177	...	16·4	Do.	do.
9	Figures for 8 calculated on chlorine, 10·0 parts,	...	...	...	...	...	152	52	..	·05	·108	...	...		

RESULTS OBTAINED FROM TREATMENT OF WASTE FROM BREWERY OF MESSRS HARRIS & Co., HOOK NORTON.
EXPRESSED IN PARTS PER 100,000.

No.	Sample.	Date, 1900.	Proportion of Waste to Sewage.	Chlorine.	Albuminoid Ammonia.	Oxygen Absorbed.		Nitrogen as Nitrates and Nitrites.	Oxygen dissolved, c.c. per litre.	Gallons per superficial yard treated.	Time in Tank.	Remarks.
						3 Min.	4 Hrs.					
1	Filtrate, . .	June 7	10% by vol. wet sludge.	...	·285	1·05	4·04	0	·74	600	...	
2	Filtrate, . .	,, 7	Do.	...	·160	·64	2·34	2·15	·84	300	...	
3	Waste and sewage,	,, 18	Do.	5·8	1·10	3·1	8·1	0	0	...	...	Depth of filter, 8 feet.
4	Filtrate, . .	,, 18	Do.	5·4	·16	1·2	2·9	·5	·20	770	48 hours	
5	Waste and sewage,	,, 28	Do.	5·7	1·00	4·79	12·07	0	0	...	...	
6	Filtrate, . .	,, 28	Do.	5·5	·228	1·18	3·7	Trace	0	800	48 hours	
7	Waste only, . .	July 18	Do.	8·8	1·32	28·5	134·5	...	...	...	48 hours	
8	Filtrate, . .	,, 18	Do.	8·4	·272	1·18	7·7	0	0	800	...	
9	Waste only, . .	Aug. 31	Do.	4·4	·550	2·18	8·91	0	...	300	48 hours	Clear portion only.
10	Waste and sewage,	,, 31	Do.	4·0	·420	1·48	4·87	0	...	300	48 hours	Clear portion only.
11	Filtrate, . .	,, 31	Do.	4·8	·084	·21	1·91	1·44	...	300	48 hours	Dissolved oxygen, 5·68 c.c. per litre, after half hour's saturation; 4·8 c.cs. after 2 hours; and 4·37 c.cs. after 24 hours.
12	Waste only, . .	Sept. 25	Do.	4·6	·528	·95	5·5	0	...	300	48 hours	Clear portion only.
13	Waste and sewage,	,, 25	Do.	4·8	·640	1·2	4·6	0	...	300	48 hours	Clear portion only.
14	Filtrate, . .	,, 25	Do.	5·4	·120	·31	1·8	1·10	1·1	300	48 hours	Dissolved oxygen, after half hour's saturation, 5·07; after 2 hours, 4·05; after 24 hours, 3·5.

by means of a pulsometer continually delivering into the hopper of the sprinkler over the filter. After being first brought into condition by means of sewage only, the filter was started on June 7, 1900, and the table (page 161) shows the results of the first four months' working.

The filtering medium is coal, screened and graded from about one inch cubes at the bottom, to quarter inch cubes at the top. The company being well provided with steam (and threatened with law proceedings from two sources), were quite prepared to pump the first filtrate on to a second filter for further purification, but this was not found necessary. The little suspended matter present after the first filtration is intercepted by shallow sand filters, and the effluent therefrom is clear, neutral, colourless, sweet, contains nitrates, and liberates albuminoid ammonia about ·1 part per 100,000. The diminution of dissolved oxygen therein also, after saturation, is less than 30 per cent. Similar installations have been put down at the Fountains Free Brewery (fig. 77, Diag. 10, Plate IX.) and Blackburn, and a modification at Messrs Sumner's Brewery, Haigh, Wigan, 'contact' filters being adopted here.

In a paper by Mr James Hendrick (Transactions of the Aberdeen Congress, 1900) are described some experiments with distillery refuse on contact beds, but without previous sewage inoculation.

Although as many as seven contacts were allowed, the results were not as satisfactory as those cited above, those actually obtained being as follow:—

RESULTS OF ANALYSIS by Messrs Dibdin and Thudichum of Burnt Ale before and after passage through Bacterial Beds.

Date of Collection.		Ammonia (grains per gallon).		Oxygen absorbed from Permanganate at 80° F. in 4 hours.
		Free.	Albuminoid.	
1899. October 26.	*Large Experiment*—			
	Crude,	24·5	45·5	700
	1st Bed—Coke,	34·0	28·0	450
	2nd Bed—Coke,	35·0	28·0	1720
	3rd Bed—Coke,	42·0	19·6	195
	4th Bed—Coke,	43·7	14·0	112
	5th Bed—Sand,	35·0	4·6	42
	6th Bed—Sand,	30·6	6·1	36
	7th Bed—Sand,	*Bottle broken in transit.*		
,,	*Small Experiment*—			
	Crude,	24·5	56·0	1250
	1st Bed—Coke,	35·0	17·5	210
	2nd Bed—Coke	28·0	19·6	363
	3rd Bed—Coke,	36·4	16·8	195
	4th Bed—Coke,	10·5	7·0	70
	5th Bed—Sand,	0·21	0·21	238
	6th Bed—Sand,	0·14	0·12	1
	7th Bed—Sand,	0·16	0·17	2

PLATE IX.]

Fountains Free Brewery Co. Ltd., Blackburn. Anti-Souring Tank and Sprinkler Filter.

[*To face page* 162.

DIAGRAM 16.

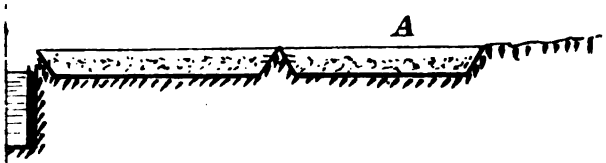

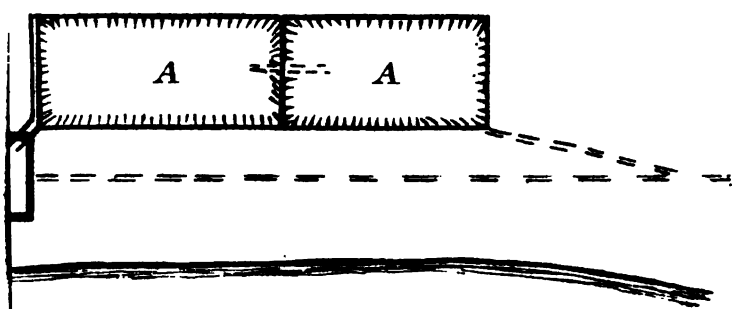

anks and Bacterial Filters.

[*To face page* 162.

RESULTS OF ANALYSIS BY MESSRS DIBDIN AND THUDICHUM OF BURNT ALE BEFORE AND AFTER TREATMENT.

Date of Collection.		Appearance.	Odour.	Reaction.	Ammonia.		Oxygen absorbed from Permanganate at 80° F.		Nitrogen as Nitrates and Nitrites.	Suspended Matters.
					Free.	Albuminoid.	At once.	In 4 hours.		
1900. April 7	Effluent from large experimental bed at Mortlach Distillery,	Clear and bright	None	Neutral	2·35	0·2	0·28	1·1	...	Traces
,, 24	Burnt ale as treated in both large and small beds,	...	...	...	35·0	52·5	...	485·0	...	...
,, 24	Large experiment—									
	No. 1, coke bed, . .	...	...	...	52·5	42·0	...	374·0	...	...
	No. 2, ,, ,, . .	...	...	...	61·2	21·0	...	190·0	...	...
	No. 3, ,, ,, . .	...	...	...	52·5	14·0	...	170·0	...	...
	No. 4, ,, ,, . .	...	...	...	43·7	5·6	...	26·2	0·16	...
	No. 5, fine coke bed, .	...	...	...	9·8	1·9	...	10·3	0·49	...
	No. 6, sand bed, . .	...	...	...	3·8	1·6	...	9·5	1·43	...
	Final bed, . . .	...	...	...	2·3	0·6	...	6·2	2·47	...
	Small experiment—									
	Last bed, . . .	...	...	...	0·2 0·2	0·140 0·210	...	2·3 2·6	Trace Trace	...

Quantities stated in grains per gallon.

CHAPTER VI.

TEXTILE INDUSTRIES.

I. Calico Bleaching and Dyeing.

Before cotton can be dyed and the finest shades brought out successfully it must be freed from practically all matters foreign to it. The object of the yarn or calico bleacher is to remove as much as possible of the objectionable matter attached to the fabric. This consists of natural resinous, fatty, waxy, colouring and albuminous matter, and other artificial bodies introduced in the sizing of the warps, as well as adventitious dust, dirt, and grease.

The nature of weavers' size varies in different mills, the composition of a representative size without loading being given by O'Neil as follows:— 1 cwt. of potato starch, 6 lbs. of tallow, 6 lbs. of soap, 1 lb. of sulphate of copper; the woven fabric to contain 5 per cent. dry.

A loading is often added which may even bring the percentage of size to 30, though calico printers as a rule work with pieces containing much less than this amount.

Assuming the calico to contain only 5 per cent. of the above size, then, when 10,000 pounds weight of cloth is put into the kiers, a bleacher has to deal with 30 lbs. of tallow, fatty salt of copper equal to 15 lbs. of tallow, and 448 lbs. of starch, or nearly 5 cwt. as the lowest total.

The process of bleaching, though differing in almost every mill according to the market supplied or as to whether it be for dyeing or printing only, is in Lancashire mills substantially as follows:—

(1) The pieces are washed to remove loose dirt and to soften the starch, etc. (steeping).

(2) They are then boiled in milk of lime to decompose waxy, greasy, and resinous matters as well as soluble soaps into insoluble soaps.

(3) Washed.

(4) Passed through a sour of weak acid. Lime soaps converted into fatty acids and salts of calcium. Any lime left in cloth is dissolved, as are also any metals in size.

(5) Washed.

(6) Boiled in resinate of soda or alkaline substitute. Fatty acids dissolved. Vegetable brown colours loosened, and fibre softened.

(7) Washed.

(8) Passed through chlorine solution or 'chemic.' Colouring matter bleached.

(9) Washed (sometimes omitted).

(10) Soured again in weak acid.

(11) Washed for final cleansing.

In order to note exactly the extent of pollution caused by each of these steps in the process of bleaching, samples were obtained from Brinscall Bleach and Print Works in January 1893, which gave the following results:—

Date.	Nature of Sample.	Parts per 100,000.				Parts per 100.		Relative Volumes.
		Dissolved Solids.		Suspended Solids.		Acidity. Normal NaHO required.	Alkalinity. Normal H_2SO_4 required.	
		Mineral.	Organic.	Mineral.	Organic.			
1893 Jan.						c.c.	c.c.	Gallons.
23	Water supply from reservoir,	8·0	10·3	Nil.	Nil.	Neutral.		...
24	First wash (or steep), (I.),	42·9	145·1	16·4	55·9	·2	...	20,000
25	Spent lime from kier, II.,	134·3	613·8	9·0	105·0	...	1·4	1,600
26	Wash out of lime kier, III.,	22·8	25·7	6·8	9·7	...	·3	20,000
and	First (or grey) sour, IV.,	288·9	131·4	8·8	55·9	32·7	...	1,600
27	Wash out of grey sour, V.,	42·7	22·0	3·4	10·7	1·5	...	20,000
	Spent ash liquor (soda), VI.,	802·1	556·4	Taken with dissolved solids.		...	10·1	1,400
	Wash out of ash kier, VII.,	30·7	20·2	3·0	9·0	...	2·0	20,000
	Spent "chemic," VIII.,	114·3	29·8	8·6	11·5	...	·3	1,600
	Second (or white) sour, IX.,	126·5	47·5	1·2	7·1	10·9	...	1,600
	Wash out of white sour, XI.,	8·2	12·1	2·9	11·2	·3	...	20,000

In this series of analyses it will be noticed that the bulk of the solids lie in—

Parts per 100,000.

	Organic Solids.	Inorganic Solids.	Total Solids.	Relative Volume.	Product of Relative Volume and Total Solids.
The first steep, . .	201·0	59·3	260·3	20,000	5,206,000
Spent lime from kiers,	718·8	143·3	862·1	1,600	1,379,360
Grey sour, . . .	187·3	297·7	485·0	1,600	776,000
Spent ash, . . .	556·4	802·1	1358·5	1,400	1,901,900

The sum of the relative volumes of these liquors compared with the whole volume of waste is as 1 to 4.

The total solids contained in these four together are to the total solids in the whole of the water turned out as 9 to 14.

It follows, therefore, that the remaining liquors amount to three-fourths of the whole, but only contain five-fourteenths of the total solids.

It may also be noted that the ratio of organic to inorganic matter in the forementioned is as 16·5 to 13, and in the remaining six as 21 to 37, which indicates greater liability to decomposition in the first series.

As a further and probably more reliable means of ascertaining the extent of the pollution caused by the bleaching of cloth, I examined samples cut from the same whole piece of cloth at various stages in the process of bleaching. A sample was cut from—

1. Grey cloth.
2. Out of lime kier.
3. After first sour.
4. Out of soda kier or 'bowk.'
5. Out of 'chemic.'
6. Out of white box after final washing.

The moisture was first estimated by drying in a vacuum desiccator. The fats and oils were then extracted by means of carbon tetrachloride, the solvent being evaporated and the residue weighed.

This left on the cloth a certain amount of dry matter easily detached in boiling water. The cloth was next, therefore, well boiled and washed with hot water, and the wash waters with detached matter evaporated to dryness in a platinum dish. The loss on ignition is entered below as volatile matter and the remainder as mineral matter. The cloth itself after drying was weighed and ignited, the loss being regarded as cellulose or actual cotton fibre, the remaining ash probably forming part of the fibre itself.

The following were the results obtained on a sample of cloth from Egyptian cotton in percentages:—

	Grey Cloth.	Out of Lime Kier.	After first Sour.	Out of Chemic or Bleach.	Out of white box after final Wash.
Moisture,	4·66	4·437	5·110	4·094	3·601
Fats,	·55	·484	·679	·376	·099
Foreign matter—					
Mineral,	2·47	1·644	·360	·363	·089
Volatile,	·93	·766	·430	·202	·177
Cellulose,	91·17	91·819	93·303	94·819	95·9646
Ash,	·20	·850	·118	·146	·0694

It is well known to bleach and dye-works' chemists that two samples of cloth cut from the same piece, even originally close together, will vary in

composition, and the above results are only useful as showing the general alteration in the character of the cloth as it passes through the various stages of bleaching.

It is also evident from the ash figures that mineral matter, not detachable by washing, is absorbed to some extent by the fibre when brought in contact with some forms of it under the varying processes of bleaching. The quantity of fats in the above grey cloth is small compared with others, some samples of which contain as much as from 2 to 5 per cent. in the grey state. As a matter of fact, it was pointed out by Dr Bowman (*Journal Society of Dyers and Colorists*, vol. iii. No. 2, page 171) that American raw cotton yields about ·48 per cent. of oils and waxes, and Surat about ·33 per cent. It is possible, therefore, that the fats and waxes even in the above cases were due, not to any sizing operations, but were the natural fats or waxes of the cotton. Dr Schunk found that the wax was similar in composition to that obtained from the leaves of the sugar cane and Carnauba palm. The difference is as follows:—

	Cotton wax.	*Sugar cane wax.*	*Carnauba palm wax.*
Carbon, . . .	80·38	81·00	80·36
Hydrogen, . .	14·51	14·16	13·07
Oxygen, . . .	5·11	4·91	6·57
	100·00	100·07	100·00

Dr Bowman, in the same Journal, also states that "When this wax is perfectly pure, it is practically insoluble in alkalies, while it is readily dissolved by alcohol and ether. This wax seems to be deposited partly on the surface of the fibre, and partly also in the lamina of the cell walls. . . . In short-fibred cotton such as low American and Surat, where portions of the seed are left adhering to the fibre in process of spinning, there is frequently, just at the point of junction of the fibre with the seed, a small quantity of gummy or almost resinous matter found, which mats together the fibres. I have not had opportunity to investigate the exact nature of this, except that it will not completely melt at a lower temperature than 212° F. This is one of the most frequent causes of annoyance to the manufacturer, because unless this is removed it prevents the fibre from being dyed, and causes serious defects in the finished goods. The high melting point causes it to be very difficult to remove by ordinary boiling processes. Along with this wax there is also a fatty acid, which possesses a composition similar to margaric acid, and has the formula $C_{34}H_{34}O_4$,* or which may be a mixture of two fatty acids, stearic and palmitic. This point needs further investigation.

"The largest soluble constituent of cotton fibre seems to be pectic acid,

* $C_{17}H_{34}O_2$?

and Dr Schunk is of opinion that the loss in weight which cotton sustains in bleaching arises from a change in this pectic acid to parapectic acid or some allied body.

"It seems to me that this pectic acid is derived most probably, not from the pure cellulose itself, but some of the celluloid bodies which we have seen are always associated with it, and which are less stable and dense than the typical cellulose, and thus the molecule is more liable to be broken up and subject to atomic rearrangement."

The two last paragraphs in the above extract are probably of some importance in an attempt to arrive at an understanding with regard to the variation in the amount of matter which can be extracted by solvents for fats from the same piece of cloth at various points in the operations of bleaching.

Noticing in the above results the varying quantities extracted by fat solvents, samples of cloth, before the 'chemic' and after the white box, were obtained from various mills and examined, and although there was always considerable reduction in the white box sample, the results were very inconstant, and are borne out by the following interesting examinations made by Dr B. W. Gerland, late chemist to Messrs Steiner & Co., Ltd., Turkey-red dyers, Church (pages 169–171). The samples of cloth were not supplied by that firm.

In examining the annexed results together with the soda and lime boils (pages 172, 173), it may be seen that the burden borne by waste liquors from a bleachworks consists principally of—(1) organic matter such as resins, fats, starches, waxes, and soaps, both in suspension and in solution; (2) lime and lime salts, both in suspension and in solution; (3) china clay in suspension; (4) soluble salts of soda and potash in solution. The salts of soda and potash, principally chlorides, the effect of 'chemicking' and the soda boil, are beyond the reach of practical precipitation at present or any other mode of elimination except the financially impossible recovery by evaporation of the water. But the bulk of the lime is precipitated by the sulphuric acid of the sour liquors and falls as sulphate, if the liquors are allowed to mix and stand. The actual precipitate, however, is usually not sufficiently dense to fall and carry with it the buoyant soaps, starches, or fats, and the result is a turbid liquor almost resembling an emulsion, even after some days' standing, unless other precipitants are added, though eventually clarification nearly always takes place. It is possible, however, that in obstinate cases where clarification only takes place after some weeks, it is due to the chemical decomposition of the organic matter with or without the intervention of micro-organisms; but the above process of self-clarification, if such it may be termed, is too tedious and requires far too much settling space to recommend itself to manufacturers generally, as the interest on the capital expended for the provision of settling capacity repre-

CLOTH No. 1. (Results expressed in percentages.)

Constituents.	Grey Cloth.	After Lime Boil.	After Ash Boil.	After 'Chemic,' first time.	After 'Chemic,' second time.	After Sour.	After White Box.
Fat and wax (CCl_4 extract),	·2265	4·5969	·5912	2·1224	·2200	·3887	1·7286
Soluble washings—							
Organic, . . .	7·8671	2·5084	2·7917	2·3136	·9696	1·1036	·6308
Mineral (affected by reagents used),	·2027	2·7380	·8979	2·8892	1·1681	·7828	1·7407
Insoluble washings—							
Organic, . . .	·9619	·9958	·1543	·4586	·0953	·1542	·1855
Mineral (affected by reagents used),	·0582	3·9615	·0969	·0989	·1919	·1084	·0742
Cloth, extracted—							
Cellulose, . . .	81·4502	74·8041	86·0021	80·7205	88·0637	88·0696	85·1671
Ash, ...	·1416	1·3046	·3742	2·3059	·2015	·3018	1·3875
Moisture, . . .	9·0918	9·0907	9·0917	9·0909	9·0909	9·0909	9·0906
	100·0000	100·0000	100·0000	100·0000	100·0000	100·0000	100·0000
Composition of mineral soluble washings—							
Silica, . . .	·014	·0703	·0149	·0885	·0310	·0469	·0467
Alumina with iron, .	·0035	·0663	·0096	·0745	·0115	·0120	·0818
Lime, . . .	·0382	·9553	·1496	·8173	·2572	·2383	...
Magnesia, . . .	·0065	·0950	·0286	·1893	·0794	·0642	...
Soda with potash, .	·0625	·8445	·2488	·5612	·2666	·2209	...
Hydrochloric acid, .	...	·0384	·1138	·2176	·1906	·1427	2·8397
Sulphuric acid, . .	...	·0902	·0644	·0343	·0762	·0579	·0591
	·1247	2·1600	·6297	1·9827	·9125	·7829	...
Less water from hydrochloric acid,	...	·0096	·0284	·0546	·0476	·0356	...
	...	2·1504	·6013	1·9281	·8649	·7473	...
Carbonic acid—loss, .	...	·5876	·2966	·9881	·3032	·0391	...
	...	2·7380	·8979	2·9162	1·1681	·7864	...
Composition of mineral insoluble washings—							
Silica, . . .	...	2·3870	·0361	·0437	·0505	·0505	...
Alumina with iron, .	...	1·1691	·0177	·0257	·0364	·0364	...
Lime, . . .	...	·1989	·0349	·0199	·0963	·0094	...
Carbonic acid and loss,	...	·2565	·0024	·0096	...	...	...
	...	3·9615	·0911	·0989	·1832	·0963	...
Composition of ash—							
Silica, . . .	...	·6077	...	·0953	·0226	·1146	...
Alumina with iron, .	...	·3274	...	·2716	·0316	·0939	...
Lime, . . .	...	·2078	...	1·6173	·0810	·0922	...
Magnesia, . . .	...	·0819	...	·0435	·0163	Trace	...
Soda with potash, .	...	·0840	...	·0694	·0210	...	...
	...	1·3088	...	2·1021	·1725	...	...

CLOTH No. 2. (Results in percentages.)

Constituents.	Grey Cloth.	After Lime Boil.	After Ash Boil.	After 'Chemic,' first time.	After 'Chemic,' second time.	After Sour.	After White Box.
Starch,	·3845						
Fat and wax (CCl_4 extract),	1·0364	1·0632	·2865	4·4731	·2740	1·0505	·1917
Soluble washings—							
Organic,	10·5563	1·3301	·7656	4·1602	·8014	·3188	·6440
Mineral (affected by reagents used),	·9863	1·2618	·4737	3·8717	·4964	·6176	·4231
Insoluble washings—							
Organic,	·8682	·8365	·9805	2·0466	·2735	·7421	·1470
Mineral (affected by reagents used),	·9963	·1839	·2321	5·2884	·1007	2·5775	·0453
Cloth, extracted—							
Cellulose,	76·6854	85·7559	88·0828	70·6970	88·8635	85·2385	89·3535
Ash,	·2956	·4770	·1380	·3722	·0997	·3694	·0453
Moisture,	9·0910	9·0916	9·0908	9·0909	9·0908	9·0906	9·0910
	100·0000	100·0000	100·0000	100·0000	100·0000	100·0000	100·0000
Composition of mineral soluble washings—							
Silica,	·0227	·0338	·0199	·0281	·0144	·0038	·0026
Alumina with iron,	·0387	·0792	·0105	·1131	·0048	·0240	·0062
Lime,	·2031	·7073	·1384	1·2698	·1048	·3548	·2030
Magnesia,	·0572	·0781	·0304	·4104	·0602	·0019	·0141
Potash,	·3288	·0249	·0228	·0436	·0145	·0579	·0768
Soda,		·0941	·1333	·6040	·0682		
Hydrochloric acid,	·3368	·2479	·0810	·0649	·1521	·0253	·0545
Sulphuric acid,	·0651	·0564	·0480	·0172	·0428	·0051	·0261
	1·0524	1·3217	·4843	2·5511	·4618	·4728	·3833
Less water from hydrochloric acid,	·0842	·0611	·0202	·0172	·0380	·0063	·0160
	·9682	1·2606	·4641	2·5339	·4238	·4665	·3673
Carbonic acid—loss,	·0181	...	...	...	...	·1511	·0558
	·9863	...	...	...	...	·6176	·4231
Composition of mineral insoluble washings—							
Silica,	...	·0900	·1409	3·5037	·0630	1·6195	·0204
Ferric oxide,	....	·0511	·0696	·1949	·0202	·7958	·0151
Alumina,	...			1·4958			
Lime,	...	·0300	·0156	·0015	·0168	·1419	·0101
Phosphoric acid,	...	...	...	·0016	...	...	...
	...	·1711	·2270	5·1976	·1000	2·5572	·0456
Composition of ash—							
Silica,	...	·0211	·0491	·1081	·0332	·2027	·0261
Alumina with iron,	...	·1168	·0386	·1618	·0231	·1141	·0326
Lime,	...	·1730	·0339	·0858	·0314	·0392	·0308
Magnesia,	...	·0466	·0076	·0084	·0058	·0092	·0058
Soda with potash,	...	·1175	·0076	·0083	·0053	·0044	·0063
		·4750	·1368	·3722	·0988	·3698	·1016

CLOTH No. 3. (Results in percentages.)

Constituents.	Grey Cloth.	After Lime Boil.	After Ash Boil.	After 'Chemic,' first time.	After 'Chemic,' second time.	After Sour.	After White Box.
Starch,	·1900	...	...	...	...	...	...
Fat and wax (CCl_4 extract),	1·2452	3·0276	·3619	·8858	·4219	1·0409	·2667
Soluble washings—							
Organic,	4·1869	1·5927	1·1818	1·1569	·4205	·5973	1·0692
Mineral (affected by reagents used),	·9657	1·5220	1·0463	·6820	1·7949	·2200	·8436
Insoluble washings—							
Organic,	·2909	·8100	·2425	·4005	·4139	·2184	·1969
Mineral (affected by reagents used),	·2154	2·0860	·1304	·1724	·1031	·0493	·0239
Cloth, extracted—							
Cellulose,	83·5867	81·1689	87·7936	86·9016	87·5716	87·5905	88·3629
Ash,	·2779	·6955	·1531	·7089	·1832	·2988	·1459
Moisture,	9·0908	9·0973	9·0909	9·0819	9·0909	9·0907	9·0909
	100·0000	100·0000	100·0000	100·0000	100·0000	100·0000	100·0000
Composition of mineral soluble washings—							
Silica,	·0441	·0272	·0383	·0399	·0400	·0313	·0435
Alumina with iron,	·0178	·0637	·0105	·0109	·0080	·0090	·0012
Lime,	·1349	·7542	·1910	·3190	·2127	·0213	·1521
Magnesia,	·0233	·0960	·0247	·0784	·0641	·0564	·0479
Potash,	·2759	·0431	·3555	·0924	·0455	·0437	·3891
Soda,		·1079	·0621		·2953		
Hydrochloric acid,	·1417	·2478	·0739	·1907	·1632	·0826	·1271
Sulphuric acid,	·0992	·0564	·0365	·0038	·0228	·0354	·0029
	·6369	1·3963	·8325	·7351	·8516	·2797	·7638
Less water from hydrochloric acid,	...	·0619	·0189	·0476	·0408	·0206	·0317
		1·3344	·8136	·6875	·8108	·2591	·7321
Carbonic acid—loss,	...	·1876	...	...	·9841	...	·0831
	...	1·5220	...	...	1·7949	...	·8152
Composition of mineral insoluble washings—							
Silica,	·1490	1·2536	·0941	·0562	·0525	·0283	...
Alumina with iron,	·0479	·7052	·0299	·0314	·0340	·0176	...
Lime,	·0194	·0895	·0036	·0685	·0105	·0036	...
	·2163	2·0483	·1276	·1561	·0980	·0495	...
Composition of ash—							
Silica,	·1227	·2201	·0536	·0317	·0205	·0653	·0141
Alumina with iron,	·0684	·1707	·0395	·1469	·0255	·0545	·0218
Lime,	·0487	·2432	·0415	·4559	·0757	·0789	·0761
Magnesia,	·0051	·0251	·0058	·0049	·0255	...	·0174
Soda with potash,	·0307	·0324	·0094	·0291	·0240	...	·0175
	·2756	·6915	·1498	·6858	·1592	...	·1469

SODA BOIL LIQUORS. (Results in parts per 100,000.)

Constituents.	No. 1.			No. 2.			No. 3.		
	Organic.	Mineral.	Total.	Organic.	Mineral.	Total.	Organic.	Mineral.	Total.
Soluble matter, . .	229·6	198·2	427·8	184·6	254·4	439·0	211·4	225·0	436·4
Suspended matter, .	83·8	14·4	98·2	73·6	5·4	79·0	32·8	25·2	58·0
Total solid matter, .	313·4	212·6	526·0	258·2	259·8	518·0	244·2	250·2	494·4
Composition of mineral matter—									
Silica, . . .		11·68			2·54			4·40	
Alumina with ferric oxide,		7·26			3·58			2·20	
Lime, . . .		8·16			1·72			4·25	
Magnesia, . .		3·83			1·71			3·68	
Potash, . .		2·28		}	130·19	{		1·45	
Soda, . . .		107·88						112·53	
Hydrochloric acid,		8·33			11·94			10·26	
Sulphuric acid, .		17·97			22·02			26·10	
		167·39			173·70			164·87	
Less water from hydrochloric acid,		2·18			2·95			2·50	
		165·21			170·75			162·37	
Carbonic acid—loss,		47·39			89·05			87·83	
		212·60			259·8			250·2	
Organic matter contained—									
Resin, fat and wax,		218·50			122·0			11·8	
Starch, . .		8·79			1·926			5·39	

sents more than the cost of rapid clarification by means of such precipitants as alumina ferric and lime, copperas and lime, or their equivalents referred to in the chapter on Chemical Engineering. Up to the present the most successful method of clarification is by means of precipitation tanks, which have already been referred to, typical instances being the cases of Messrs John Stanning & Sons, Leyland (fig. 78, Plate X.), and the Whalley Abbey Print Co. (Plate XI.).

The plant shown in fig. 78, Diag. 17, Plate X., was designed and set up by the author at the works of Messrs John Stanning & Sons, Leyland, Lancashire, and has been in successful operation since January 1894. The liquors for treatment, dye and bleach mixed, as well as all wash-waters, enter the precipitation tanks along the carrier from the works after admixture with milk of lime and alumina ferric as precipitants. A dense precipitate of sulphate of lime and aluminium hydrate is immediately formed in the carrier, and the whole then travels to the first precipitation

PLATE X.]

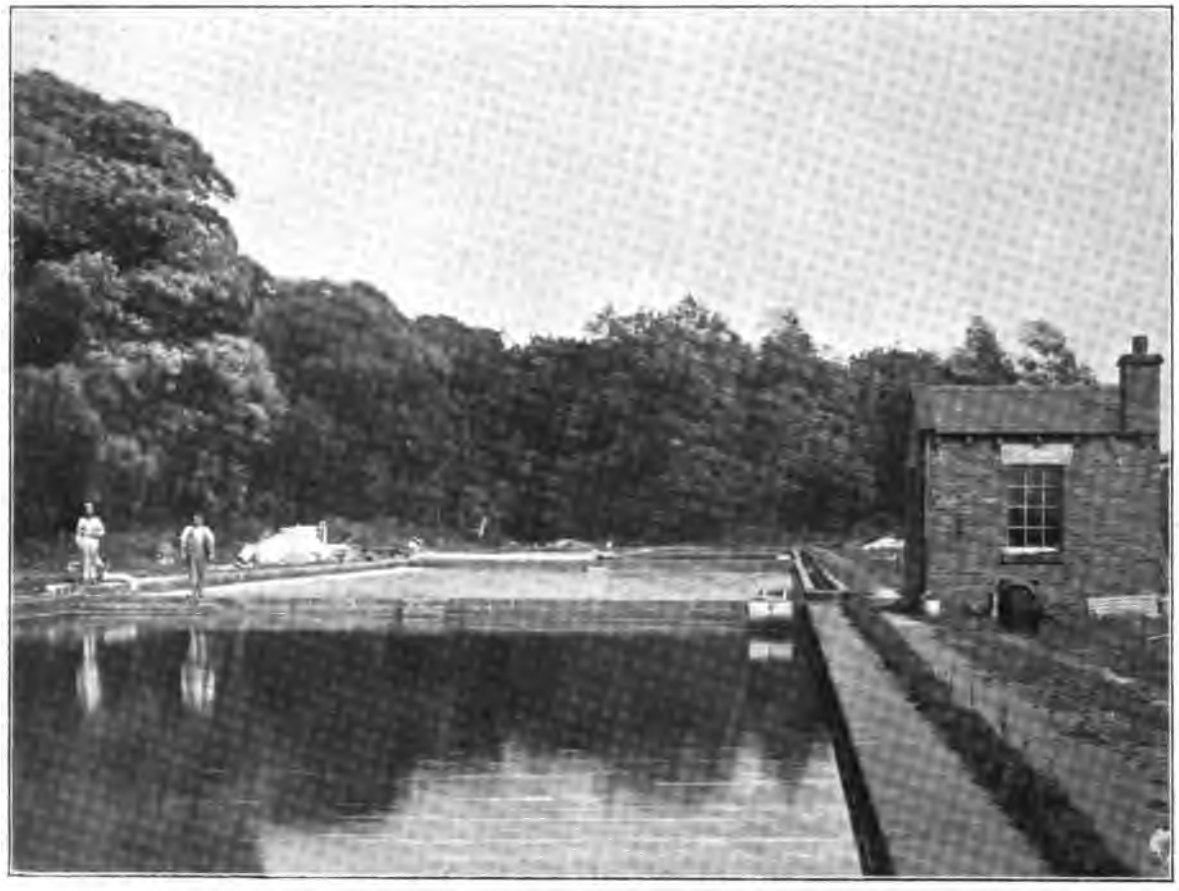

Precipitation Tanks, Messrs Stanning & Co. Ltd., Leyland.
W. Naylor, A.M.I.C.E., Engineer.

[*To face page* 172.

PLATE XI.]

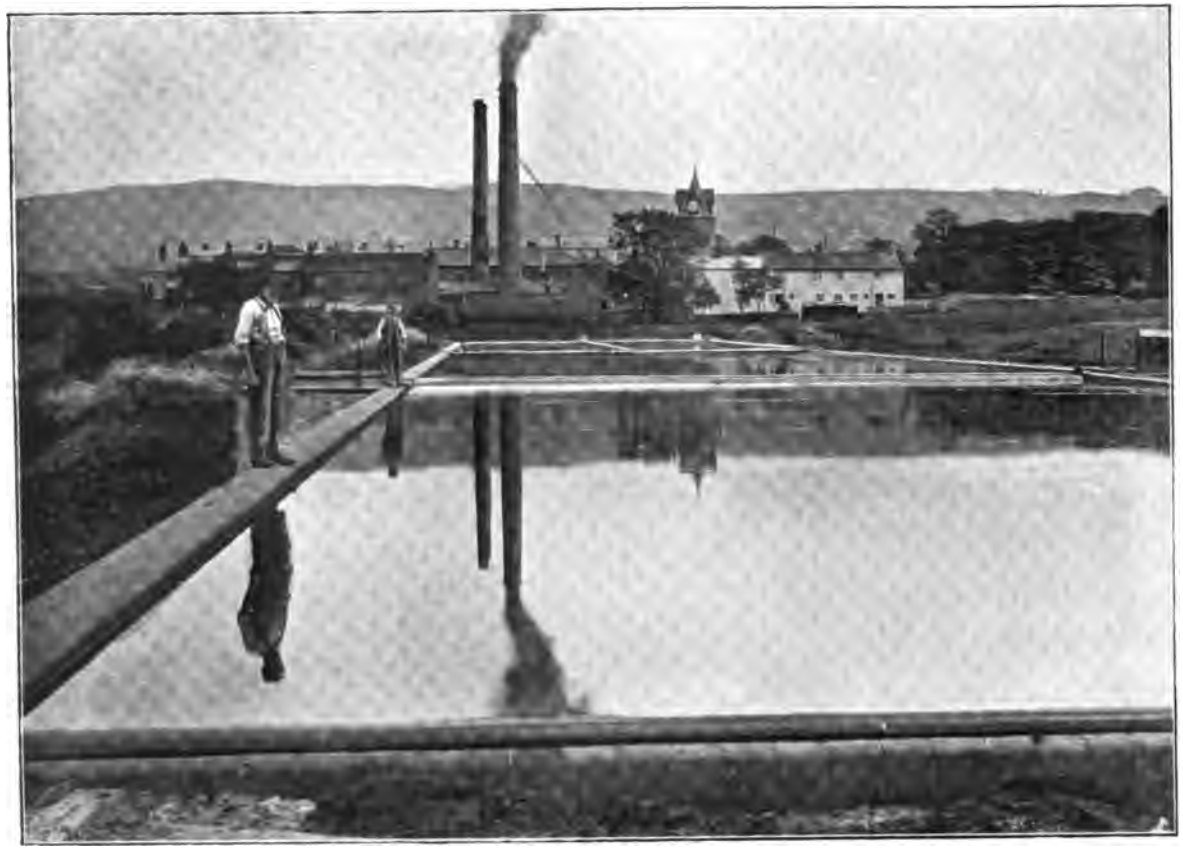

Precipitation Tanks, The Whalley Abbey Co., near Blackburn.
W. Naylor, A.M.I.C.E., Engineer.

[*To face page* 172.

PLATE XI.]

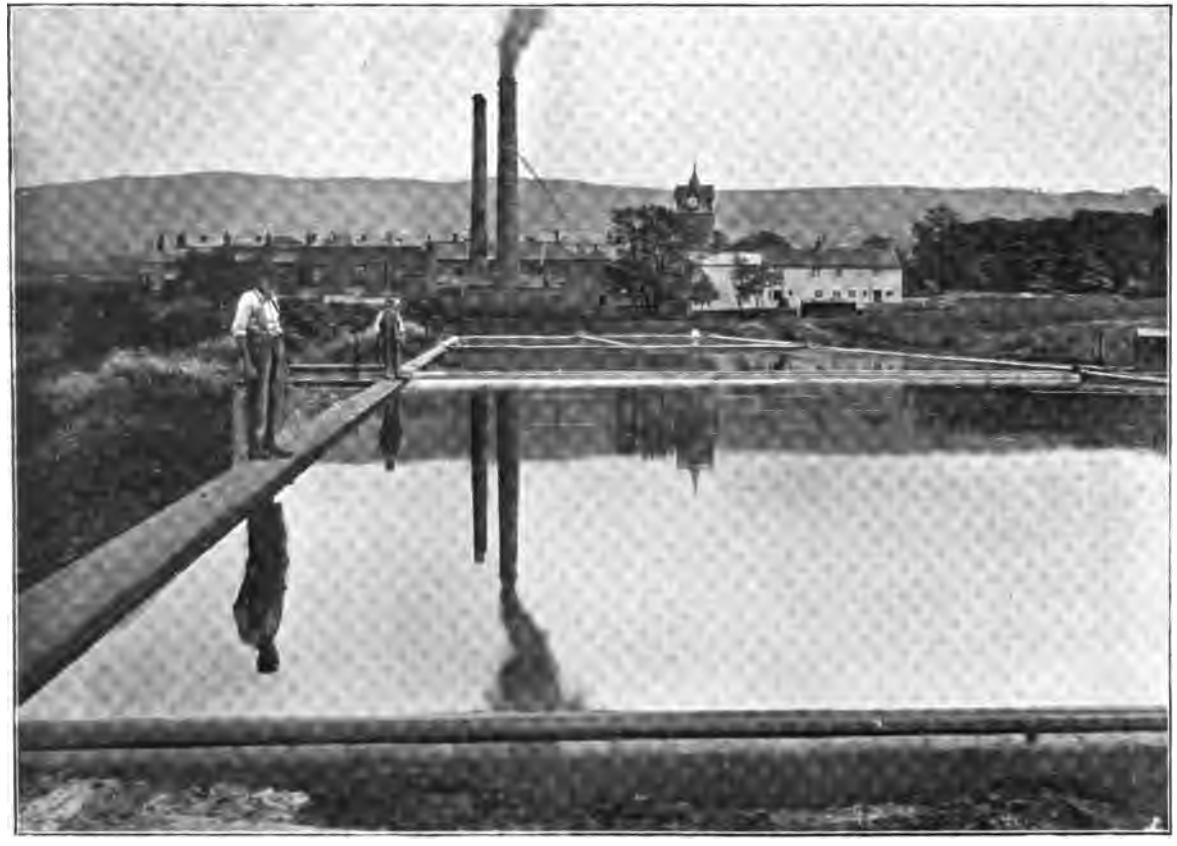

Precipitation Tanks, The Whalley Abbey Co., near Blackburn.
W. Naylor, A.M.I.C.E., Engineer.

[*To face page* 172.

DIAGRAM 17.

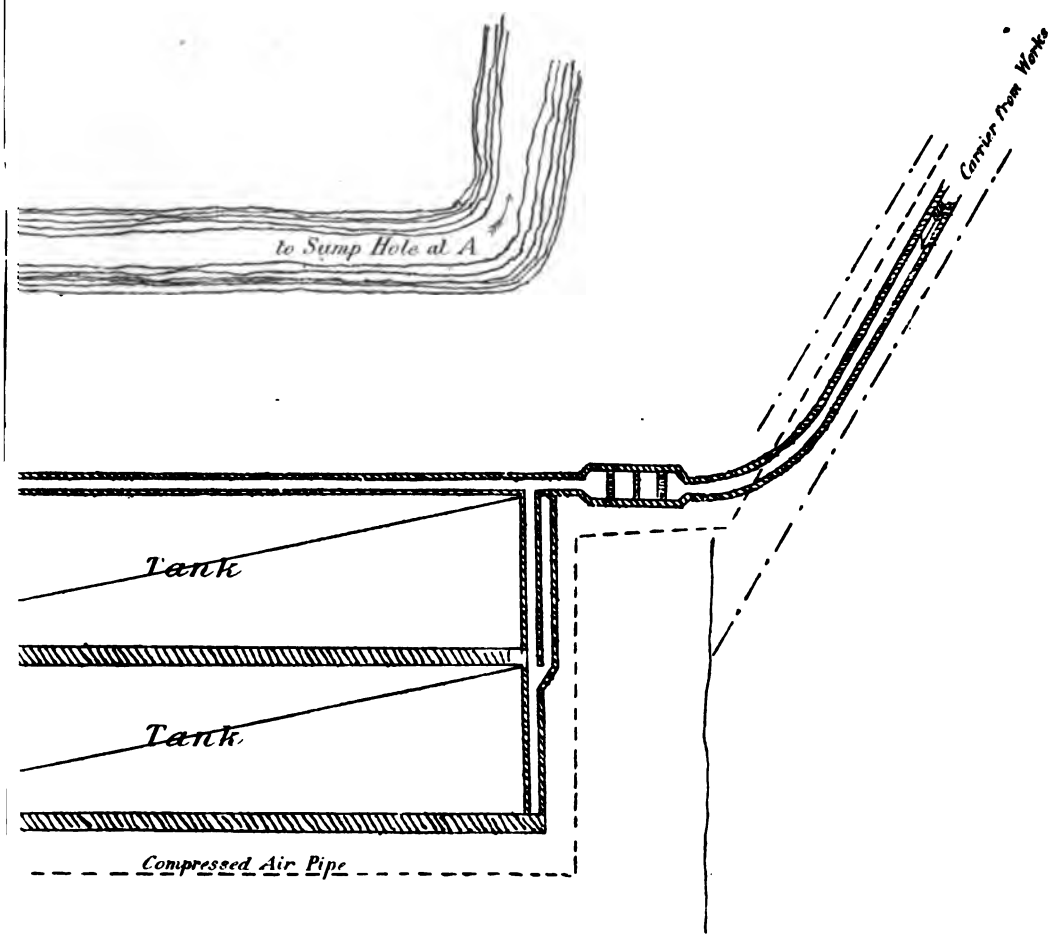

[To face page 172.

LIME BOIL LIQUORS. (Results in parts per 100,000.)

Constituents.	No. 1.			No. 2.			No. 3.		
	Organic.	Mineral.	Total.	Organic.	Mineral.	Total.	Organic.	Mineral.	Total.
Soluble matter, . .	916·4	985·8	1902·2	1703·2	401·2	2104·4	1817·4	459·2	2276·6
Suspended matter, .	2·8	39·8	42·6	75·6	40·2	115·8	174·0	7·4	181·4
Total solid matter, .	919·2	1025·6	1944·8	1778·8	441·4	2220·2	1991·4	466·6	2458·0
Composition of mineral matter—									
Silica, . . .		2·36			12·66			8·25	
Alumina with ferric oxide, . .		14·27			15·17			13·00	
Lime, . . .		443·13			150·47			173·40	
Magnesia, . .		7·57			10·19			13·33	
Potash, . .		...			91·14			107·25	
Soda, . . .		79·60			5·17			7·68	
Hydrochloric acid,		154·01			33·41			27·79	
Sulphuric acid, .		12·14			14·95			15·71	
		713·08			333·16			366·41	
Less water from hydrochloric acid,		...			8·23			6·85	
					324·93			359·56	
Carbonic acid—loss,		124·49			116·47			107·04	
					441·40			466·60	
Organic matter contained—									
Resin, fat and wax,		7·3			9·16			12·06	
Starch, .		40·15			7·30			12·00	

tank, which has a division down the centre. About 90 per cent. of the precipitate falls in these two tanks, which are emptied once per week, the larger tanks being allowed to run for a fortnight or more. The precipitate of aluminium hydrate forms to some extent an insoluble lake with some of the colouring matter, and so considerably clarifies the liquor of dye colorations apart from the deposition of suspended matter. The tops of the divisional walls are formed into carriers with the forward edge about half an inch lower than the rear, and having a top course of splay bricks for the lips. By this means any forward tank can be missed and the liquors may be passed on by the side carrier running the whole length of the tanks; thus any one, two, or three of the four tanks can be used simultaneously, while the fourth is being cleared of sludge.

The best results appear to be obtained from continuous flow, due probably to the important fact that the suspended matter in dye and bleach liquor aggregates during slight agitation; although, on standing either in

bottles or tanks for a short time, considerable deposition of the solids and colouring matter takes place apart from any chemical action of the precipitants. The top liquor is conducted away by floating arms, and the sludge is raised by a 'Shone' ejector, into which it gravitates. The tank walls are 3 feet thick, of solid brickwork in cement mortar, and the floors are 12-inch concrete throughout. The volume of liquor treated per day is 500,000 gallons, that being the capacity of the precipitation tanks. The precipitated liquors are generally allowed to run into the river direct, but if required for further use they flow into the storage reservoir (fig. 78). In the latter case they are lifted from the sump A at the end of reservoir (fig. 79, Diag. 18) on to the sand filters, for a mechanical straining really, which deliver the water clear and sparkling, and fit for the finest bleachwork or delicate shades of dyeing and washing, etc., into the clear-water tanks. Thence pipes convey it from a well to the lodges and various departments of the works. The filter beds are about five feet deep, the filtering medium being sand and furnace clinker of various thicknesses. They have not sufficient area to filter 500,000 gallons per day, as it was only necessary to make up a short supply of water from another source at the time of their construction. The analyses show, however, that dissolved solids are largely eliminated by the sand and cinder filters. The quantity of precipitant used is 466 lbs. per day, or 6½ grains per gallon, of alumina ferric. About 10 tons or 12 tons of cloth are bleached per day, the cloth reckoned dry, showing on the average 10 per cent. of size to be extracted in the process. This amounts to 1·1 ton per day of dry, or 22 tons of wet sludge, the whole reckoned as *in suspension*, and the sludge containing 95 per cent. of water. But to this must be added 1¼ tons of starch, lime, soda and other matters passing from the works to the tanks as waste, making a total of 47 tons of wet sludge per day. Of this only 33 tons are retained as sludge, the remainder passing away in solution in the tank effluent. The wet sludge is lifted by the ejector to a height of 17 feet and delivered into earth drying pits, from which it is carted away when dry. The ejector has a capacity of 100 gallons, and the air-compressor 6-inch steam- and air-cylinders, with a 9-inch stroke. Working at a steam-pressure of about 50 lbs. per square inch, it is capable of dealing with 100 tons of wet sludge in twelve hours. Tested on the 21st November 1894, the steam cylinder of the air-compressor indicated 1·75 H.P. with a pressure of 10 lbs. per square inch in the air-receiver, and a piston speed of 150 feet per minute. The diagram taken at the same time from the air cylinder indicated 1·1 H.P., the steam-cylinder running with a light load of 0·76 H.P. The compressor was working two hours and twenty-seven minutes and ejected 11,800 gallons, or 63·2 tons of sludge.

The following analyses of samples drawn during a period of six hours, at intervals of fifteen minutes, expressed in parts per 100,000, show the effect of the treatment:—

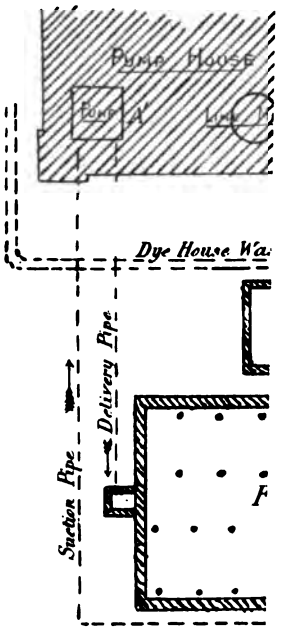

Plan

Description of Sample.	Dissolved Solids.			Suspended Solids.			Total Solids.			Remarks.
	Volatile.	Mineral.	Total.	Volatile.	Mineral.	Total.	Volatile.	Mineral.	Total.	
Raw liquor, .	44	86	130	24	12	36	68	98	166	Highly discoloured.
Tank liquor, .	40	92	132	...	...	...	40	92	132	Clear.
Filtered liquor,	10	56	66	...	...	...	10	56	66	Clear and sparkling.

The composition of the mineral dissolved solids in each case was:—

	Common Salt.	Silica.	Sulphate of Lime.	Sulphate of Iron.	Sulphate of Ammonia.	Ammonia.	Chloride of Lime.	Oxide of Iron.	Carbonate of Lime.
Raw liquor, .	36·3	15·8	13·2	7·3	3·5	3·1	8·9	...	...
Tank liquor, .	34·1	...	45·3	0	0	2·8	6·1	3·0	1·6
Filtered liquor, .	14·5	14·4	21·8	0·56	...	Trace	...	Trace	4·7

It will be seen that although precipitation alone removes all the suspended solids, in this case no appreciable difference is perceptible in the amount of dissolved solids. The raw liquors entering the tanks are muddy, discoloured, and contain suspended matter. They emerge from them clear, but little different so far as dissolved solids are concerned, but the filtered liquor is considerably improved, both as regards suspended and dissolved solids, containing only 44 grains of solids per gallon. The sludge when dried at a temperature of 212° F. gave the following analysis:—

	Per cent.
Organic matter, ...	19·6
Silica, etc., ...	38·5
Calcium carbonate, . . .	31·4
Alumina, ...	3·2
Ferric oxide, ...	7·3
	100·0

The calorific power of the organic matter present is so low that the sludge is valueless as a fuel, for when placed in a calorimeter tube with a fusion-mixture it will not ignite but is liquefied. When powdered and thrown on a boiler furnace it gives for a few minutes a lambent blue flame with little heat, and then settles into a solid mass of clinker, which it is almost impossible to fire in ordinary furnaces. As a manure also it is

valueless, the percentage of phosphates and ammonia being exceedingly low. If burnt to a clinker it might be used for mortar making, but other substances equally good can be obtained at a cheaper rate.

The precipitation tanks for bleach waste at Messrs Grafton & Co., Accrington (fig. 80, Plate XII.) are much the same, both in construction, capacity and mode of operation, as those at Messrs Stanning & Sons, Leyland, except that the admission of some portion of the soaping liquors renders the actual deposition of the solids much more difficult, the composition of such deposit or sludge being as follows :—

	Per cent.
Moisture,	82·50
Organic matter,	7·82
Ash,	9·694
Organic matter—	**Per cent.**
Fats, resin, and wax,	5·08
Starch,	2·46
Organic nitrogen,	0·064
Composition of ash—	
Silica,	4·141
Alumina,	2·244
Ferric oxide,	0·094
Lime,	2·036
Magnesia,	0·086
Soda,	0·139
Hydrochloric acid,	0·023
Sulphuric acid,	0·082
	8·850
Less water from hydrochloric acid,	0·007
	8·843
Carbonic acid—loss	0·851
	9·694

Even after the total elimination of all suspended matter by means of precipitants, and what small quantity of the dissolved matter can be so eliminated, there remains in bleachworks' liquors some considerable quantity of highly objectionable dissolved organic matter. In the case of sewage the usual method—and only satisfactory method until recently—was to remove this by means of filtration through land or artificial filters, as set forth in Chapter IV. The effect of such treatment was to oxidise the nitrogenous matter first into ammonia, etc., and then into nitrates by the aid of bacteria, and the carbonaceous matter to humus and inert gases. The exact parts played by the various aërobic and anaërobic organisms have only recently, if at all, become understood, albeit they have been sufficiently investigated to justify the installation of many specially formed bacterial filters or

PLATE XII.]

Bleach Department Precipitation Tanks, Messrs Grafton & Co., Accrington.

[*To face page* 176.

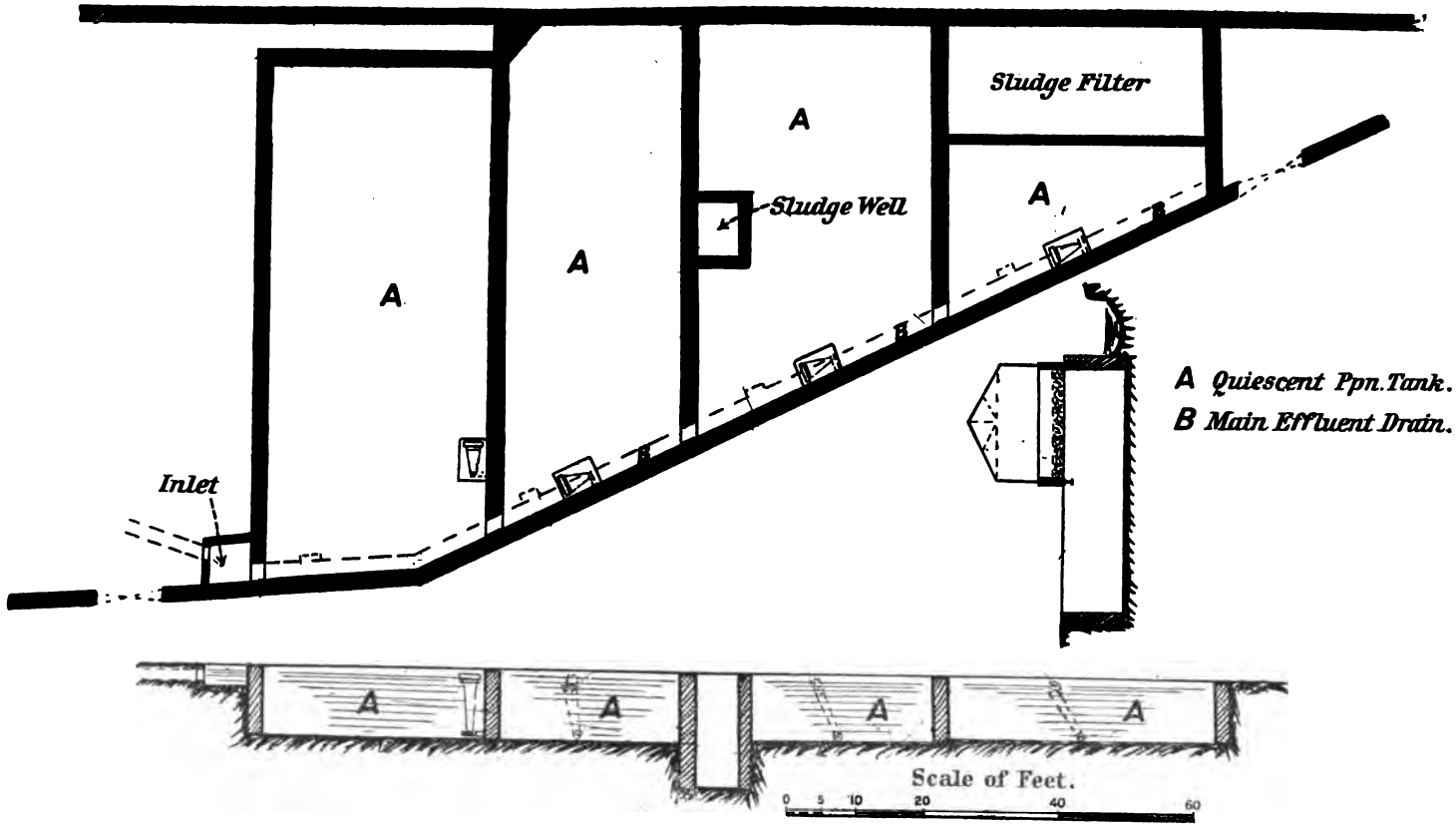

FIG. 80.—Bleach Department Precipitation Tanks, Messrs Grafton & Co., Accrington.

bacterial culture beds which are giving satisfactory results, as described in the chapter on "Brewing Waste."

The application of bleachworks and other similar waste to land resulted in failure because of its tending to become sour (if not already sour, due to mineral acids), due to the acid fermentation of starches and other similar carbonaceous compounds; in addition to this, artificial filters were made of such fine material, the filtration being regarded as mechanical only, that they became either choked up with sour organic matter or concreted with precipitated carbonate of lime, or both.

If only the drainage from a bleachworks can be rendered free from acidity and the 'chemicking' solutions kept apart, it is quite amenable to the bacterial treatment as described in Chapter V., dealing with distillery and brewery waste products.

At the works of Messrs Peel, Tootal & Co., Ltd., the precipitation

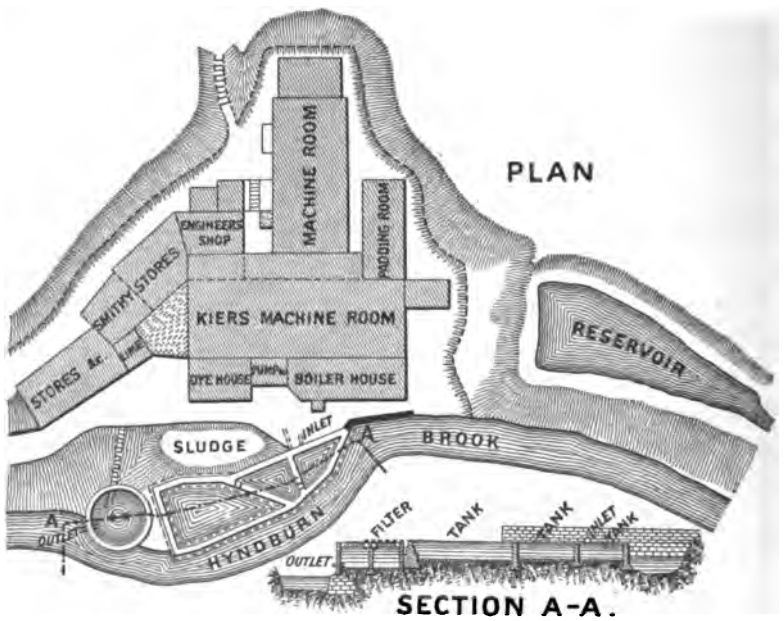

FIG. 81.—Precipitation Tank and Bacterial Filter, Messrs Peel, Tootal & Co., Accrington.

tanks (fig. 81, Pl. XIII.) are allowed to receive the sewage from the closets about the works.

The waste liquors contain lime, soda, chlorine and the various substances removed from the crude cloth, starchy sizes, china clay, etc., as well as adventitious dirt from the floors and workshops generally. Some dyeing is

PLATE XIII.]

Messrs Peel, Tootal & Co. Tanks and Sprinkler Filter.

[*To face page* 178.

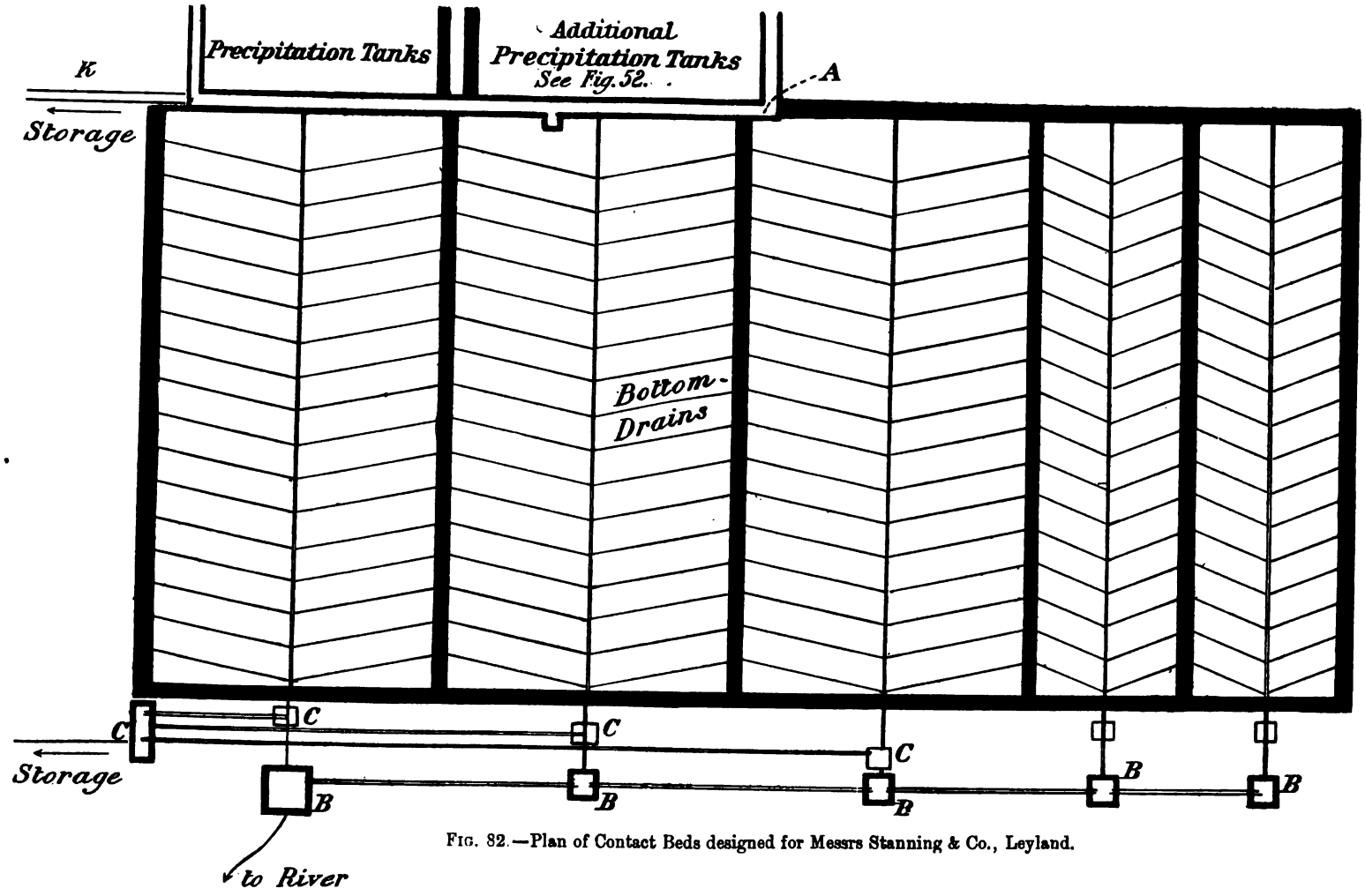

FIG. 82.—Plan of Contact Beds designed for Messrs Stanning & Co., Leyland.

also done, and the waste liquors from the dye becks find their way to the main outfall.

For some three or four years up to July 1900, the firm had struggled with precipitation tanks and ordinary continuous flow filters without success. At that time proceedings were instituted under the Rivers Pollution (Prevention) Act, and as a result it was decided to try bacterial treatment.

At the outset the capacity of the tanks was increased so as to hold not less than three days' flow. They consist of common impounding tanks provided with floating arms, and are all connected and used as one large septic tank (Pl. XIII.).

The continuous overflow from the tank is delivered into a hopper over the revolving sprinkler, which delivers on to a filter of graded furnace ashes, the largest of which, forming the bottom layer, pass through a 2½-inch ring, and the smallest, forming the top layer, are retained by a quarter-inch mesh. The filter has an area of 60 square yards and a depth of 11 feet.

When the plant was first put into operation about four tons of old sewage sludge were delivered into the tanks and then they were filled with ordinary liquors. After standing until the mass became putrid, about four days, the ordinary liquors were introduced and the filter fed. To maintain the putridity all the works closets were connected with the tanks, and in case of any falling off, sewage sludge is added from time to time. This, however, is not found necessary to any extent.

As is the case with all bacterial filters provided with sprinklers, a small amount of suspended matter is delivered with the final effluent, but in any case it is intercepted easily by a small sand filter.

At the Leyland Bleach Works, where the volume of waste approximates half a million gallons per day, a system of 'contact' beds on a small scale was resorted to for bacterial treatment, and steps taken for the installation shown in fig. 82. This method of contact, however, has since been abandoned, and the whole of the tank effluent is now about to be treated on eight bacterial sprinkled filters, each 60 feet in diameter, and providing a total area of 3000 square yards, the filters being composed of clinker 6 feet deep, but otherwise as in figs. 73 and 77. The new round filters are now nearly completed. Those designed as shown in fig. 82 were simply tanks filled with furnace ashes, on to which the tank effluent proper, after being in contact with putrid sludge for a period of about twenty-four hours, was delivered. About four hours' contact was allowed, and at the expiration of that time the effluent was clear, colourless, free from putridity, neutral, contained no free chlorine, remained sweet, was charged with oxygen, and deposited no sediment. (See table on page 157.)

CHAPTER VII.

DYEING AND CALICO PRINTING.

DYE-HOUSE liquors pure and simple generally bear but a small burden of solids either dissolved or in suspension, and the wash-waters naturally less. The materials used are mostly soluble dyes or soluble mordants, or soluble compounds of dyes and mordants—lakes. In fact, these liquors, *judiciously* discharged and properly mixed, may be rendered to some extent self precipitating. But at one mill only in the author's experience is this satisfactorily accomplished, and there the discharges and mixtures are very systematically controlled. Log books with printed headlines are kept by the chemist in charge, the pages of which the following four forms are reduced facsimiles.

CONDITION OF EFFLUENT AT DIFFERENT TIMES DURING THE DAY, ...19...

Time, ...									
Temperature F°, . .									
Colour, ...									
Parts per 100,000. Total solids, . .									
Mineral matter, .									
Solids deposited upon standing 24 hours,									
Mineral matter in deposited solids,									
Organic matter in same,									
Alkalinity expressed in milligrams of caustic soda (NaOH) per litre,									
Sulphuric acid equivalent to the above,									
Acidity expressed in milligrams of sulphuric acid (H_2SO_4) per litre,									
Caustic soda equivalent to the above,									
Appearance after standing 24 hours,									
Remarks—									

DRUGS USED DURING THE DAY.

Date,									
Lime,									
Caustic soda,									
Soda ash,									
Vitriol,									
Muriatic acid,									
Alum,									
Salt,									
Bichrome,									
Sugar of lead,									
Litharge,									
Soap,									
Oil,									
Anilin oil,									
Alizarin (dry),									
Indigo,									
Anilin colours,									

QUANTITIES OF WATER USED AND YARN DYED.

Date,									
Weather,									
Gallons per 24 hours going down brook,									
Water used in—									
Boilers,									
Condensers,									
T. R. dye-house,									
Fancy dye-house,									
Blue dye-house,									
Bleach house,									
Total at effluent,									
Bundles of yarn dyed during the day—									
Turkey reds and purples,									
Fast blacks,									
Indigo blues,									
Fancy colours,									
Waste liquors let off during the day—									
Turkey red house. Steep,									
Turkey red house. Wash,									
Turkey red house. Alum,									
Turkey red house. Wash,									
Turkey red house. Turkey red dye becks,									
Turkey red house. Lucies,									
Turkey red house. Wash,									
Fast blacks. Dye becks,									
Fast blacks. Soap,									
Fast blacks. Sours,									
Fast blacks. Wash,									
Indigo blues. Lime sludge,									
Indigo blues. Sours,									
Indigo blues. Wash,									
Fancy colours.									

COMPOSITION OF WASTE LIQUORS.

	Fast Blacks.			Indigo Blues.			Other Colours.		
	Dye Beck.	Soap.	Sours.	Lime Sludge.	Sours.	Wash.			
Date,									
Temperature F°,									
Colour,									
Parts per 100,000. Total solids,									
Parts per 100,000. Mineral matter,									
Parts per 100,000. Solids deposited upon standing 24 hours,									
Parts per 100,000. Mineral matter in deposited solids,									
Parts per 100,000. Organic matter in same,									
Alkalinity expressed in milligrams of caustic soda (NaOH) per litre,									
Sulphuric acid equivalent to above,									
Acidity expressed in milligrams of sulphuric acid (H_2SO_4) per litre.									
Caustic soda equivalent to above,									
Appearance after standing 24 hours,									
Remarks—									

With calico printing liquors the conditions are different, such liquors being highly charged with objectionable gums or thickenings, the medium for placing the colours on the engraving rollers, which may be albumen, casein, china clay, pipeclay, dextrin, glue, gluten, glycerin, gum senegal, gum tregacanth, molasses, lead sulphate, potato starch, salep, shellac in borax, sugar, wheat flour, wheat starch, zinc chloride, and zinc nitrate, etc. These thickenings are washed out after printing by soap solutions, and the resulting soap liquors are of a very polluting character and difficult to purify. The difficulties of treatment are best understood from the following reports made by the author to the Ribble Joint Committee, in connection with the purification plant at Messrs Grafton's works, Accrington (fig. 83, Pl. XIV.).

"A trial of dyeing department waste was arranged for the application of 10 grains per gallon, and I made a start at the beginning of an average working day at 6 a.m., on the 11th ult.

"Before starting, the arrangement made as to 10 grains per gallon was altered, and it was decided to add precipitants—lime and alumina—in whatever quantities were necessary to produce a visible precipitate, and one likely to clarify the raw liquors. This was done for a period of twelve hours, the

crude liquor being divided into two portions in the entrance carrier, one portion being conducted to one tank, and the remaining portion to another.

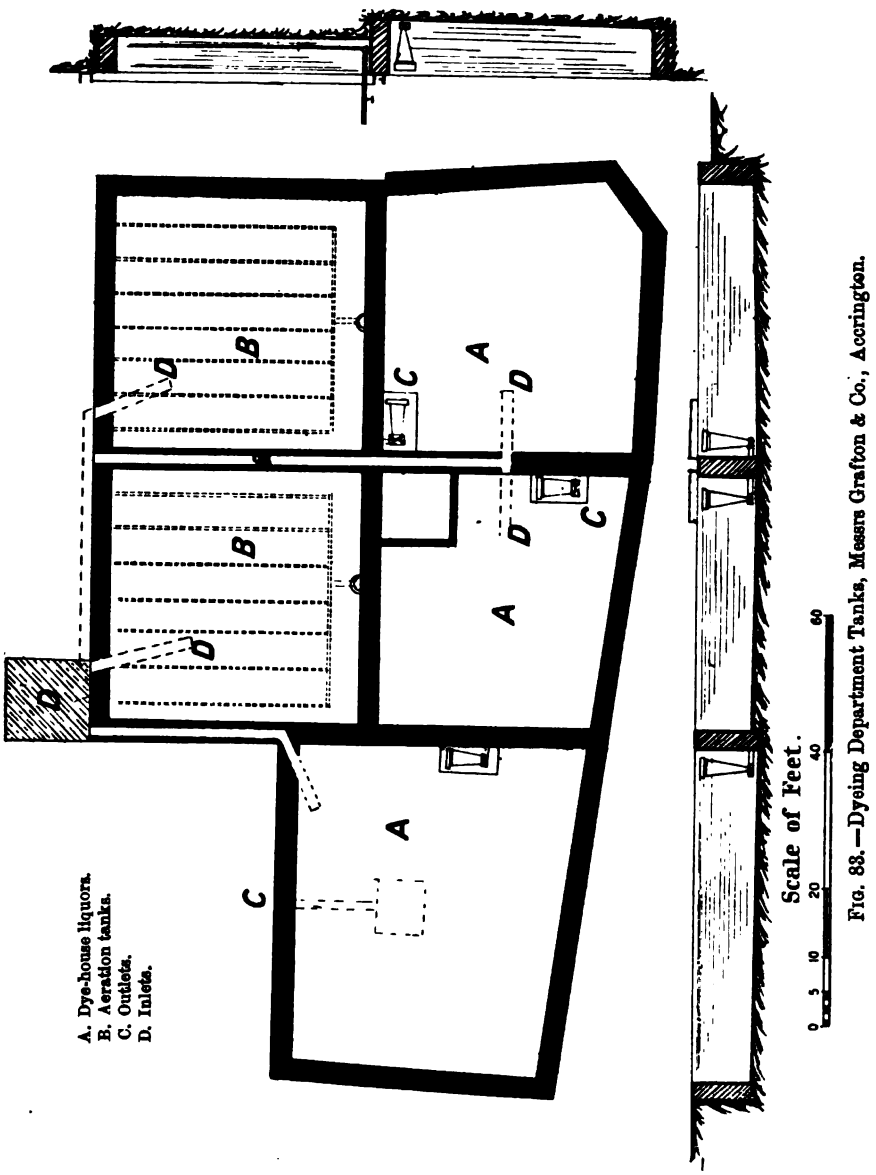

FIG. 83.—Dyeing Department Tanks, Messrs Grafton & Co., Accrington.

"The quantity treated with precipitants was 53,000 gallons, and that no so treated 63,000 gallons. The precipitants used were alumina ferric, 95

PLATE XIV.]

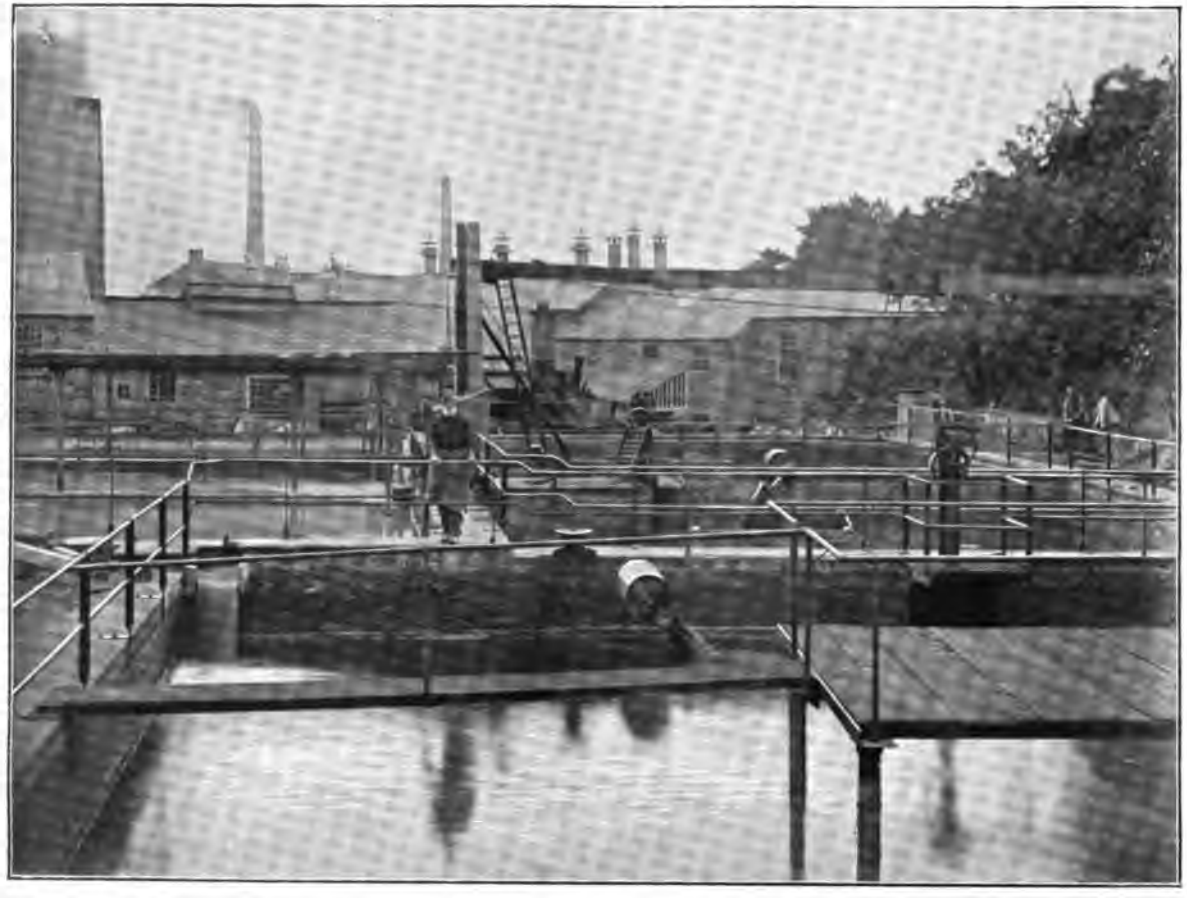

Dyeing Department Tanks, Messrs Grafton & Co., Accrington. [*To face page* 184.

lbs. (equivalent to 12½ grains per gallon), and lime, 73 lbs. dry (equivalent to 9½ grains per gallon).

"Both tanks were then allowed to stand for twelve hours, but on drawing off the supernatant liquor the following morning at 6 o'clock, that to which precipitant had been added was not visibly different in the least from the other, except that it was a little paler in colour. Both were turbid, and contained a considerable amount of suspended matter.

"During the period of drawing off, samples were taken at intervals of five minutes continually from each tank, and afterwards when mixed found to contain as follows:—

Description of Sample.	Dissolved Solids.			Suspended Solids.			Gross Solids.		
	Mineral.	Volatile.	Total.	Mineral.	Volatile.	Total.	Mineral.	Volatile.	Total.
Liquors untreated, .	47	25	72	8	12	20	55	37	92
Liquors treated, .	54	18	72	11	17	28	65	35	100

"The former contained albuminoid ammonia, ·162, and the latter ·118 parts per 100,000.

"Now in examining these figures it will be noticed at once that while the amount of dissolved solids has been stationary, that of suspended solids has been increased. Some of the precipitant itself has, therefore, *apparently* remained in suspension.

"That this cannot be due to the *density* of the water is evident from the small quantity of dissolved solids, the specific gravity being actually only 1·0007, and further, the same precipitants used in similar quantities in salt water of this density form a precipitate which sinks rapidly.

"But the figures also show that there is—

"1st. An increase in dissolved mineral matter.

"2nd. A decrease in dissolved volatile matter.

"3rd. An increase in suspended mineral matter.

"4th. An increase in suspended volatile matter.

"These changes suggested that displacement of dissolved volatile matter into suspended had occurred, and on further examination this was found to be so.

"The untreated liquor contained considerable quantities of soap—the fatty acids liberated being as much as 25·4 parts per 100,000, equivalent to a soda soap of palmitic acid (palm oil is used in the works) of 27·5 parts per 100,000 *—and the *insoluble* soaps of lime or aluminium formed there-

* This is evidently a high figure, since this quantity of soap in 250,000 gallons is equivalent to 5 cwt. soap daily.

from by the precipitants *do not sink* but rise to the surface naturally. This natural propensity is, however, overcome to a large extent by the encumbrance of other heavy foreign matter in the liquors, the final result being that the precipitate formed floats at any point in the tank between the bottom and the top, and is weighed in as suspended matter. This is evident from the fact that the treated liquor contained no soaps nor fats in solution, while the suspended matter contained as much as 20·2 parts per 100,000 fatty acids, equal to lime soap 21·7 per 100,000.

"Up to the present, therefore, the aim and object of the precipitant is defeated, inasmuch as the precipitate formed cannot sink and is not permitted to rise.

"To be of practical use it must be either—

"(1) Further weighted; or

"(2) Produced initially heavier.

"Either of these conditions can be procured. The first by (*a*) the aggregation of the suspended precipitate with the heavier sludge deposited; or (*b*) the further addition of precipitants after the decomposition of all the soaps, when a heavier precipitate unaffected by these is formed which will weigh down the whole mass.

"The aggregation of the suspended solids (*a*) by agitation is a purely mechanical operation, as per the Mather & Platt process of air injection, or revolving agitators would suffice.

"The addition of further precipitants (*b*) was tried in the laboratory, when it was found that 30 grains of alumina-ferric and 4 grains of lime gave a satisfactory precipitate, which settled and left a colourless good effluent with an increase of only 2 parts per 100,000 in the dissolved mineral solids.

"The second of the two alternative necessary conditions could be brought about by the total separation of the soap liquors from the general drainage of the dyeing department, and this arrangement, with separate treatment of these liquors, would, I imagine, be much the better one.

"After such separation the general liquors would need but little, if anything, in the way of precipitants, and the treatment of soap liquors alone is a very simple matter.

"**Bleach Liquors.**—The bleach liquors are drained to a series of separate tanks apart from the bulk of the dye-house liquors, and a trial was made with these on Tuesday, November 24, commencing at 7 a.m. and finishing at 5 p.m. The operations in the works did not really cease until an hour later, but a final flush of soap liquors was expected about 6, and the mixing arrangements were hardly adequate for coping with this in the dark. As before, two parallel tanks were running and precipitants added in *quantum suff.* to one only.

"The amount treated with precipitant was 80,000 gallons. The precipitants used—lime 77½ lbs., copperas 107 lbs., or 6½ grains per gallon of the former and 9¼ grains per gallon of the latter.

"Samples were drawn the next morning after fourteen hours' subsidence, and on examination these gave the following results :—

Results expressed in parts per 100,000.

Description of Sample.	Date.	Dissolved Solids			Suspended Solids.			Gross Solids.		
		Mineral.	Volatile.	Total.	Mineral.	Volatile.	Total.	Mineral.	Volatile.	Total.
Crude liquor, .	Nov. 24, 1896	83	65	148	1	18	19	84	83	167
Subsidence tank effluent, no precipitant used,	Nov. 25, 1896	83	54	137	2	16	18	85	70	155
Tank effluent, precipitant added,	Nov. 25, 1896	91	43	134	5	13	18	96	56	152

"These results indicate a condition of affairs very much similar to those described in the tanks for treating the liquors from the dye-house, and which could be remedied by the same means.

"Fat acids were recovered from the subsidence effluent at the rate of 6·4 parts per 100,000, and from the liquor, after treatment with precipitants, at the rate of 5·5 parts per 100,000.

"The effluent, after subsidence only, was treated in the laboratories with precipitants in amounts sufficient to bring about clarification and decolorisation, this being at the rate of 56 grains of copperas and 69 grains of lime per gallon. The resultant liquor was then found to give no increase in dissolved solids.

"These quantities of precipitants are, however, not by any means what I should recommend, on account of cost. They could probably be reduced if the soap liquors were treated separately. The suspended matter in this sample, it is only just to state, would probably have been much less had it not been that a considerable disturbance was caused by the decomposition of old sludge on the tank bottom."

January report, 1898 :—

"A special report on the treatment of liquors at these works was presented in the report for December 10, 1896, and the results of some special trials embodied therein. The conclusions arrived at after these trials were, briefly,

that a satisfactory precipitation of the solids in suspension could only be brought about by either—

"(1) A large quantity of precipitants; or

"(2) The separation of the soap liquors.

"The first part of the report concludes as follows:—

"'The second of the two alternative necessary conditions could be brought about by the total separation of the soap liquors from the general drainage of the dyeing department, and this arrangement, with separate treatment of these liquors, would, I imagine, be much the better one.

"'After such separation the general liquors would need but little, if anything, in the way of precipitants, and the treatment of soap liquors alone is a very simple matter.'

"A reply to this report was received by Messrs Grafton, which appeared in the *Proceedings* for January 1897, to the effect that though the proposed separation of soap liquors would be a difficult operation, and could hardly be considered as a reasonable, practicable, and available method, they were willing to satisfy the Committee to make this experiment, though they doubted whether the result would bring about a very gratifying improvement. In their letter of December 10 they also explained that the separation and treatment of soap liquors is not an easy matter, and on more than one occasion exception has been taken to my statement that 'the treatment of soap liquors is a very simple matter.'

"The matter was then adjourned until April, and again until July and August, owing to the absence of the manager abroad. In October a deputation of the firm appeared before the Committee and suggested that a trial with the treatment of soap liquors, which had just then been separated so far as the dyeing department was concerned, should be made by the Committee's staff. Since then two trials have been made, and it must be admitted at the outset that though 'the treatment of soap liquors is a very simple matter,' the treatment of soap liquors when mixed with a large proportion of starches, gums, and other thickenings, is not so simple as the treatment of soap liquors alone, or at any rate it is more expensive.

"The first trial was made on November 23 on the soap liquors only from the dyeing department, the general dye liquors being taken into a separate tank. Both sets of liquors were treated with precipitants—lime and alumina ferric. The quantity of general liquors treated was 28,575 gallons, soap liquors 12,487. The precipitants used for soap liquors were 50 lbs. lime and 65 lbs. alumina-ferric, or 28 grains per gallon of lime and 36½ of alumina-ferric.

"Samples of the soap liquor were drawn before treatment and are here given for comparison with those drawn after treatment on the morning of the 24th.

Results expressed in parts per 100,000.

Description of Sample.	Date.	Dissolved Solids.			Suspended Solids.			Gross Solids.		
		Mineral.	Volatile.	Total.	Mineral.	Volatile.	Total.	Mineral.	Volatile.	Total.
Before treatment, .	Nov. 23, 1897	98	70	168	45	71	116	143	141	284
After treatment, .	,, ,,	112	53	165	19	52	71	131	105	236

"Although there is here shown a reduction in dissolved and suspended matter, the amount of suspended matter left was unsatisfactory in a high degree. It was noticed, however, that, after two days' standing, a complete settlement of the suspended matter had taken place without further treatment, and the same result was brought about immediately by the addition of a small quantity of acid. The tank effluent in question after such treatment, or after simple standing for two days, contained as follows, the original crude liquor being placed below for purposes of comparison :—

Results expressed in parts per 100,000.

Description of Sample.	Dissolved Solids.			Suspended Solids.			Gross Solids.		
	Mineral.	Volatile.	Total.	Mineral.	Volatile.	Total.	Mineral.	Volatile.	Total.
Tank effluent, .	98	62	160	0	0	0	98	62	160
Crude liquors, .	98	70	168	45	71	116	143	141	284

"The precipitated or self-deposited matter was examined and found to consist of 33 per cent. of combustible organic matter. The fatty acids in it formed 14·3 per cent. of the total, organic carbon 27·3 per cent. of the total, and organic nitrogen 3·4 per cent. of the total, dry. It is fairly evident, therefore, that this sludge ought, from its nature, to be deposited in the tanks and not in the bed of the stream.

"Of the various means for bringing this about the following three at once present themselves :—

"(1) The application of further precipitants, subject to the absence of a disadvantageous increase in the dissolved solids.

"(2) The use of the same quantity of precipitants, but with more efficient mixing arrangements, such as the aëration suggested in the report twelve months ago, by which means the maximum effect of neutralization or a little extra precipitant can be quickly observed; or,

"(3) The ordinary use of precipitants with increased settling space.

"As the first of these methods could be tried without any special preparation, a further trial was made on December 21. The quantity treated on this occasion was 18,733 gallons, the precipitants used being 33 grains per gallon of lime, and 25 grains per gallon of alumina ferric. Although the precipitants do not work out to a larger quantity than those tried on the first occasion, it was evident that any further addition would have been accompanied by no benefit, as the liquors for treatment on the second occasion were not nearly so foul as those on the first.

"The results before and after treatment were found to be as here follow:—

Parts per 100,000.

Description of Sample.	Dissolved Solids.			Suspended Solids.			Gross Solids.		
	Mineral.	Volatile.	Total.	Mineral.	Volatile.	Total.	Mineral.	Volatile.	Total.
Raw liquor, .	66	76	142	13	59	72	79	135	214
Treated liquor,	86	83	169	16	14	30	102	97	199

"The results therefore up to this point indicate the desirability of—(1) either a larger area so as to admit of longer settlement; or (2) better facilities for the mixing of the liquors with precipitants.

"I am still convinced that separation and distinct treatment of the soap liquors and thickenings is desirable, for, although considerable attention and care is required in the treatment of these, the remaining portion of the liquors require simple subsidence only as shown by the trials made.

"On the 23rd of November the general liquors, apart from the soap liquors, were treated with 5 grains of lime only, and 4 grains of alumina-ferric. The results of this treatment are here shown:—

Parts per 100,000.

Description of Sample.	Dissolved Solids.			Suspended Solids.			Gross Solids.		
	Mineral.	Volatile.	Total.	Mineral.	Volatile.	Total.	Mineral.	Volatile.	Total.
Crude liquor before treatment,	33	24	57	0	4	4	33	28	61
Same after treatment,	46	20	66	0	4	4	46	24	70
Without precipitants,	37	20	57	0	1	1	37	21	58

"It is thus plain that the general liquors subjected to quiescence only are of a more satisfactory character than those treated by precipitants. As a

consequence, although the quantity of precipitants used on the soap liquors and thickenings appears large, it is really small if spread over the whole volume of the liquors, as is done in many bleach and dye works in the water-shed. The soap liquors and thickenings represent only one-tenth of the whole, and consequently the precipitants used on the soap liquors on the first occasion represent only 2·8 grains of lime and 4 grains of alumina-ferric on the first occasion, and 3·3 grains of lime and 2·5 of alumina-ferric on the second occasion, calculated on the total waste.

"On the whole, therefore, the result of separating the soap liquors may be advantageous even at present, when the *gross* treatment is taken into account, as exemplified by the following table :—

Results expressed in parts per 100,000.

	Dissolved Solids.			Suspended Solids.			Gross Solids.			Grains per Gallon. Precipitants used calculated on total Volume.	
	Mineral.	Volatile.	Total.	Mineral.	Volatile.	Total.	Mineral.	Volatile.	Total.	Lime.	Alumina.
Results of trial of precipitants without separation of soap liquors and thickenings, as reported in December 1896—											
Before treatment,	47	25	72	8	12	20	55	37	92	9½	12½
After treatment, .	54	18	72	11	17	28	65	35	100	...	...
Mean result of subsidence of general liquors and treatment of soap liquors by precipitants, November 24th, .	44	23	67	2	6	8	46	29	75	2·8	4
Mean result of subsidence of general liquors and treatment of soap liquors by precipitants, December 21st, .	42	26	68	2	2	4	43	29	72	3·3	2·5
Mean result of subsidence of general liquors and treatment of soap liquors, followed by neutralization and violent agitation or two days' settlement, .	43	24	67	0	1	1	43	25	68	2·8	4
Mean result of treatment of Grafton's effluent, dyeing department only, without precipitants and without separation of soaps, to May 21st, 1896, .	70	22	92	6	8	14	76	30	106	0	0

"Naturally the further treatment suggested here will entail stricter supervision and more systematic care than the commoner *laissez faire* mode of just placing a lump of alumina-ferric in the channel to the tanks and then allowing the tanks and liquors to come out as best they will, though there is no desire on my part to suggest that this mode is that which has been followed constantly up to the present by Messrs Grafton & Co. At the same time it is a common and very favourite mode, and some considerable effort will be required to disabuse manufacturers' minds of the idea that this is a practicable and reasonable method. The treatment referred to above will undoubtedly present itself—in fact, I know that it does—to the management at Messrs Grafton's as complicated, laborious, and expensive; nevertheless, I am convinced that nothing less will bring about the elimination of the suspended solids in the whole of the liquors; and, after all, the cost of precipitants on one-tenth of the total liquors, as well as the labour on same, will compare favourably with the cost of precipitants and labour involved on the whole of the liquors at such works as Messrs Davies & Eckersley, Steiner & Co., Standish Company, Stanning & Son, and others."

February report, 1899:—

"In October last it was reported that the experiments being made with regard to the feasibility of certain suggestions as to the treatment of soap liquors had been suspended, owing to the crude liquors being weaker than usual.

"The consideration of the treatment of Messrs Grafton's dye works waste liquors has passed through the following stages so far as reports presented to you are concerned:—

"I. June 1896.—Complaint made concerning suspended matters, averaging 21 parts per 100,000, and a call made for the use of precipitants.

"II. July 1896.—Deputation appeared, stating that owing to quantity of thickenings and soap in liquors, precipitants would be ineffective except when used in unreasonable quantities.

Instructions given by Committee for further report on this point.

"III. December 1896.—Special Report presented to the effect that this has been found correct largely, and that to obtain a satisfactory effluent precipitants in large quantities would have to be used, or the soap liquors separated for special treatment.

"IV. August 1897.—Soap liquors separated. Series of special trials made and reported upon in January 1898. Results briefly that—

1. An advantage on the gross effluent accrued, nine-tenths

being much better, but the soap liquor separated; one-tenth of the whole yielded an unsatisfactory effluent.

"2. That is, this unsatisfactory effluent from the one-tenth would be improved probably by either—

"(*a*) The use of more precipitants on this portion.

"(*b*) The application of some more manipulative mixing arrangement, such as aëration.

"(*c*) More settling space.

"V. February 1898.—Messrs Grafton decide to try on a small scale the second of these suggestions—(*b*).

'VI. May 1898.—Report presented that no conclusions could be drawn up to that time.

"VII. October 1898.—Reported that experiments had been suspended.

"VIII. November 1898.—Experiments resumed, never less than a thousand gallons being treated.

"Now the results of the later experiments have proved, to my mind at any rate, that the method experimented upon is decidedly an advantageous one. It is, briefly, the installation of an aëration or 'blowing up' arrangement in the soap tanks, by means of which the actual effect of a given amount of precipitant can be easily and quickly observed, and the amount of precipitant required *or its character* arrived at in due course by a trial and error method. The fact that this necessary amount of precipitant is continually varying, is alone sufficient argument. The results of the last five experiments are appended, and in not one of these cases was the amount to be used decided upon the first time, and in some cases, in fact the most effective case, not even until the sixth time.

"It is the kind of operation that would be performed in many of the stages of the technical processes going on in the mill, the matching of a given colour for instance; and for this reason, as well as for the want of a better term, it has been styled in the analysis sheet appended, 'rational' treatment.

"The results show—

"1. In the majority of cases an improvement on the old method in every point.

"2. In every instance a reduction in the polluting ingredients of the effluent.

"The two samples in which the suspended solids were not reduced to a greater extent than by the ordinary treatment (U and X), contained the largest amount of dissolved solids, and even here, a little more precipitant made W better than V, and Z better than Y.

"The other side of the question is the cost, but that I always fully bear in mind. The suggestion is not a wild, expensive, or purely scientific one, but one, on the other hand, which I submit comes within the best known reasonable means. Its cost, taken in conjunction with total cost of treat-

Messrs Grafton & Co.'s Dye-house and Soaping Liquors.

Results of Examination.

Nature of Sample	Analysis Letter.	Date.	Parts per 100,000.									
			Dissolved Solids.			Suspended Solids.			Gross Solids.			Fatty Acids.
			Mineral.	Volatile.	Total.	Mineral.	Volatile.	Total.	Mineral.	Volatile.	Total.	
Raw liquor (*a*),	P	Nov. 21, 1898	85	69	154	31	107	138	116	176	292	30
Effluent—rational treatment (*b*),	Q	,,	88	56	144	10	15	25	98	71	169	12
Raw liquor,	R	Nov. 22, 1898	40	130	170	3	41	44	43	171	214	106
Effluent—Grafton's (*c*),	S	,,	68	74	142	9	42	51	77	116	193	39
Effluent—rational treatment (*d*),	T	,,	72	74	146	9	10	19	81	84	165	14
Raw liquor,	U	Nov. 28, 1898	139	119	258	67	83	150	206	202	408	13
Effluent—Grafton's (*e*),	V	,,	143	120	263	50	63	113	193	183	376	5
Effluent—rational treatment (*f*),	W	,,	150	104	254	55	60	115	205	164	369	6
Raw liquor,	X	Dec. 14, 1898	84	124	208	12	12	24	96	136	232	31
Effluent—Grafton's (*g*),	Y	,,	123	103	226	6	33	39	129	136	265	36
Effluent—rational treatment (*h*),	Z	,,	128	72	200	10	39	49	138	111	249	14
Raw liquor,	A	Jan. 23, 1899	36	62	98	14	27	41	50	89	139	48
Raw liquor—after subsidence only,	B	,,	38	70	108	4	20	24	42	90	132	44
Effluent—rational treatment (*i*),	C	,,	52	37	89	1	16	17	53	53	106	26

(*a*) 26 grains of lime and 20 grains of copperas were inadvertently added before the sample was drawn—per gallon. (*b*) 18½ grains of lime and 14 grains of copperas added to P. (*c*) 26 grains of lime and 20 grains of copperas added to R. (*d*) 26 grains of lime and 34 grains of copperas added to R. (*e*) 26 grains of lime and and 20 grains of copperas added to U. (*f*) 26 lime, 28 alumina-ferric, and 34 grains of copperas added to U. (*g*) 26 grains of lime and 20 grains of copperas added to X. (*h*) 26 grains of lime and 3½ grains basic sulphate alumina. (*i*) 21 grains alumina-ferric and 7 grains basic sulphate of alumina added to A.

ment, would compare favourably with that of treating the same volume (400,000) at print works generally, and there is every reason to believe that Messrs Grafton are just as desirous as any other firm of fulfilling their obligations under the Rivers Pollution Prevention Acts. It is a pleasure to acknowledge the assistance and facilities they afforded in the conduction of the experiments, and I trust they will adopt the suggestions which result therefrom, which adoption I certainly consider will bring their treatment of dye liquors very near to all that may be reasonably expected."

The sludge deposited from these tanks had the following composition :—

	Per cent.
Moisture (loss at 110° C.),	62·82
Organic matter (loss by calcination),	15·09
Ash,	22·09
	100·00

Organic matter contained :—

Fatty acids, resin and wax,	4·34
Starch,	0·41
Organic nitrogen,	0·0449

Composition of Ash :—

Silica,	7·2558
Alumina,	4·8069
Ferric oxide,	0·0394
Lime,	6·1125
Magnesia,	0·2099
Potash,	0·0249
Soda,	0·0794
Hydrochloric acid,	0·0223
Sulphuric acid,	2·5648
	21·1154
Less water from hydrochloric acid	0·0054
	21·1100
Carbonic acid, loss,	0·9802
	22·0902

The system of blowing up sludge already deposited suggests at first the possibility of throwing into solution some portion of it already existing as suspended matter, but this was not found to be the case in a series of experiments conducted at the Standish Print Company's works in the year 1898 and reported upon as follows :—

"With the object of testing this, trials were made with full tanks on the five dates detailed in the result sheet, the trials extending on each day for a period of about twelve hours. The incoming raw liquors were divided between two tanks of equal capacity, one containing old sludge, and the

other no sludge at all. Precipitants were added in equal quantities to both tanks, and then the contents submitted to treatment by aëration, one fourth of the old sludge being withdrawn every time. The differences in results, which are shown in the result sheet, are certainly not of a very marked character. Briefly, they may be summarised as follows:—

"(1) That the omission of the old sludge conduces to a greater quantity of suspended matter, though this is mainly inorganic in character and would settle if more time were allowed. If complete settlement were allowed the total (average) solids with old sludge would be 154 as compared with 148 without.

"(2) The average volatile matter in old sludge effluent as compared with that in clean tank effluent is as 54·5 to 52·1.

"The oxygen-absorbed figures are sufficiently high to suggest some things other than the usual organic matters as the reducing agents, and, on the whole, the differences in favour of omitting the old sludge are so small and so near to the margin of experimental error that it is questionable whether the extra expense involved in obtaining this advantage is justifiable, at any rate on these results.

"The average of these results compares with the average of former results presented to the Committee as follows:—

	Dissolved Solids.	Suspended Solids.	Total Solids.
Average of last nine results presented from June 29, 1896, to February 1898, .	200·9	1·7	202·6
Average of five trials on tanks, ...	158·1	1·8	159·9"

While in some cases the separation of soap liquors from dye-house liquors, or dye-house liquors from bleach liquors, may be an advantage, in a few, satisfactory results are obtained after the complete mixture of the whole of the waste products of the factory, as in the case of the Low Mill Print Co. (Plate XVII.). This is particularly the case with Messrs Steiner & Co., Ltd., Church, though here both the bleaching and the dyeing (Turkey red) are of a special character, resulting in a large volume of waste lightly charged. The precipitation tanks (figs. 84 and 85, diagram 19, Plate XV.) are very capacious, having a total holding capacity of about 1,500,000 gallons. Before the liquors leave the works for the tanks, distant away about a quarter of a mile, they are treated with a solution of basic sulphate of alumina. A complete settlement takes place in the tanks, a clear liquor about the colour of champagne resulting, and containing solids as follows:—

PLATE XV.]

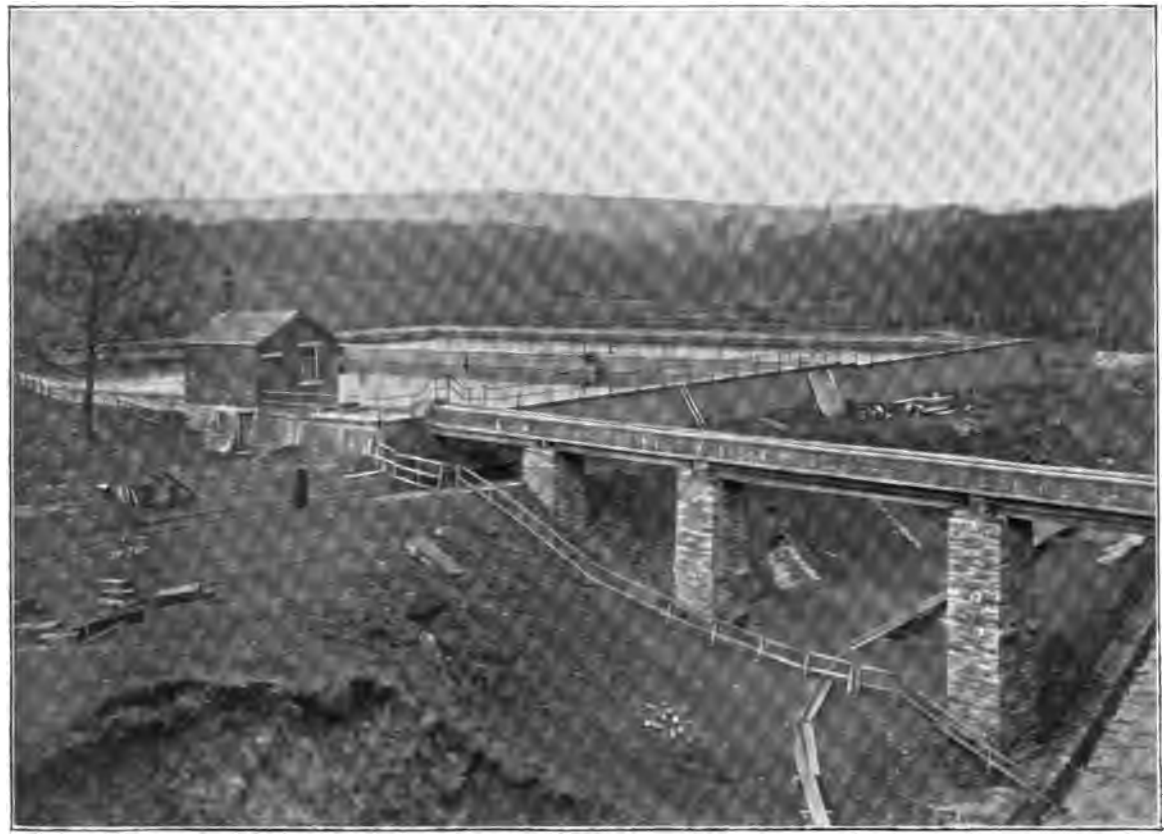

Precipitation Tanks, Messrs Steiner & Co. Ltd., Church.

[*To face page* 196.

PLATE XVI.]

Low Mill Bleaching and Printing Co. Precipitation Tanks.

[*To face page* 196.

DIAGRAM 19.

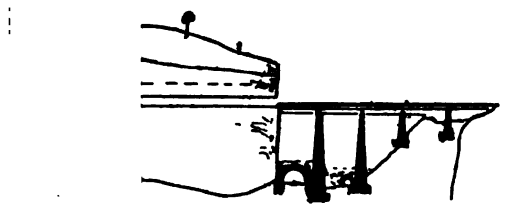

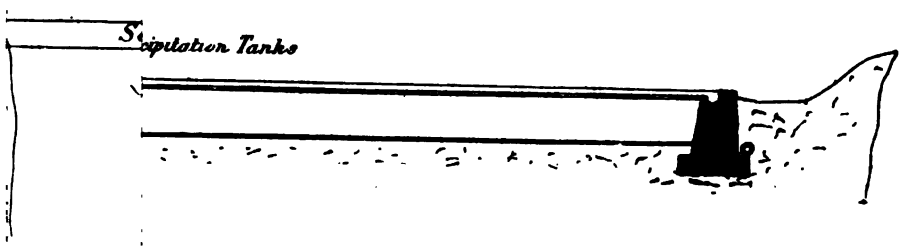

[*To face page* 196.

Results of Examination of Effluents from Standish Company.

Parts per 100,000.

Sample.	Date. 1898.	Dissolved Solids.			Suspended Solids.			Gross Solids.		
		Mineral.	Volatile.	Total.	Mineral.	Volatile.	Total.	Mineral.	Volatile.	Total.
Raw liquor,	June 29,	121·5	69·5	191	47·5	52·5	100	169	122	291
Effluent from clean tank,		120·5	62	182·5	9·5	2	11·5	130	64	194
Effluent from tank containing old sludge,		114·5	62·5	177	·5	·5	1	115	63	178
Raw liquor,	June 30,	99	82·5	181·5	1	2	3	100	84·5	184·5
Effluent from clean tank,		100	68	168	2	4	6	102	70	172
Effluent from tank containing old sludge,		108·5	62·5	171	0	1·5	1·5	108·5	64	172·5
Raw liquor,	July 1,	105	69	174	4·5	4·5	9	109·5	73·5	183
Effluent from clean tank,		95	46	141	5	6	11	100	62	152
Effluent from tank containing old sludge,		108	59	167	1	2	3	109	61	170
Raw liquor,	July 4,	100	42·5	142·5	6·5	6	12·5	106·5	48·5	155
Effluent from clean tank,		101·5	44·5	146	6·5	3	9·5	108	47·5	155·5
Effluent from tank containing old sludge,		109·5	51	160·5	1	1·5	2·5	110·5	52·5	163
Raw liquor,	July 5,	80·5	35·5	115·5	14·5	7	21·5	94·5	42·5	137
Effluent from clean tank,		77·5	25·5	103	3	1·5	4·5	80·5	27	107·5
Effluent from tank containing old sludge,		84	31	115	0	1	1	84	32	116

The sludge as a rule has no inherent value so far as is known at present, though in some few cases it has been utilised. In the case of the Pincroft Indigo Dyeing Company, Adlington, the wash waters from the dyed cloth are treated with lime water and afterwards passed to precipitation tanks, A, as shown in plan, fig. 86, diagram 20. A settlement of indigo here takes place which is lifted back after the supernatant liquor has been withdrawn, by means of the ejector shown. Separate tanks, marked aniline dye precipitation tanks are provided for all liquors other than indigo wash waters.

Another interesting case of sludge utilisation is that set out in Patent Specification No. 15,208, 1896, the complete specification being as follows:—

"This invention is designed principally for the treatment of sludge or deposit from the foul or discoloured water discharged from dye works, but it is also equally applicable to the treatment of the sludge or deposit from other works such as those of calico-printers, or bleachers, the sludge or deposit from sewage works, and other deposits which require similar treatment.

"The improved process consists principally in drying, or drying and calcining the sludge by means of suitable artificial top heat upon the same filter-bed or draining surface by which it has been drained.

"The invention and the method of carrying the same into practical effect will be readily understood on reference to the sheet of illustrative drawings hereunto annexed, and the following explanation thereof.

"Fig. 87, diagram 21, on the drawings is a vertical longitudinal section of my improved apparatus, fig. 88 a vertical transverse section, and fig. 89 a horizontal section of the same. [A view of the works where this process is in operation is given in Plate XVI.]

"In carrying out my invention I build a suitable receptacle or tank, *a*, of brickwork or stonework, preferably in a rectangular form, divided into compartments by means of transverse or longitudinal walls, *b* (or both), supporting a covering formed of brick arches, *c*, springing from the said walls.

"These walls, *b*, extend alternately from one outside wall to the opposite one (see fig. 3) so that the passage of any heated air entering the first compartment will be in a serpentine form through each compartment in succession to the last and thence to the flue or chimney, *d*, as shown by the arrows on fig. 3, and thus the heated air will traverse over the whole surface of the sludge.

"A furnace, *e*, is in communication with the first compartment, and the last compartment communicates with the chimney shaft, *d*. The whole of the floor of the tank *a* is slightly inclined towards the surface *e*, and is made with a draining surface *f*, composed of suitable porous material, preferably fine boiler ashes and clinkers, in or under which is embedded or laid a series of earthenware or other suitable drain pipes *g*, placed also at a slight inclination so as to carry away the water or effluent.

PLATE XVII.]

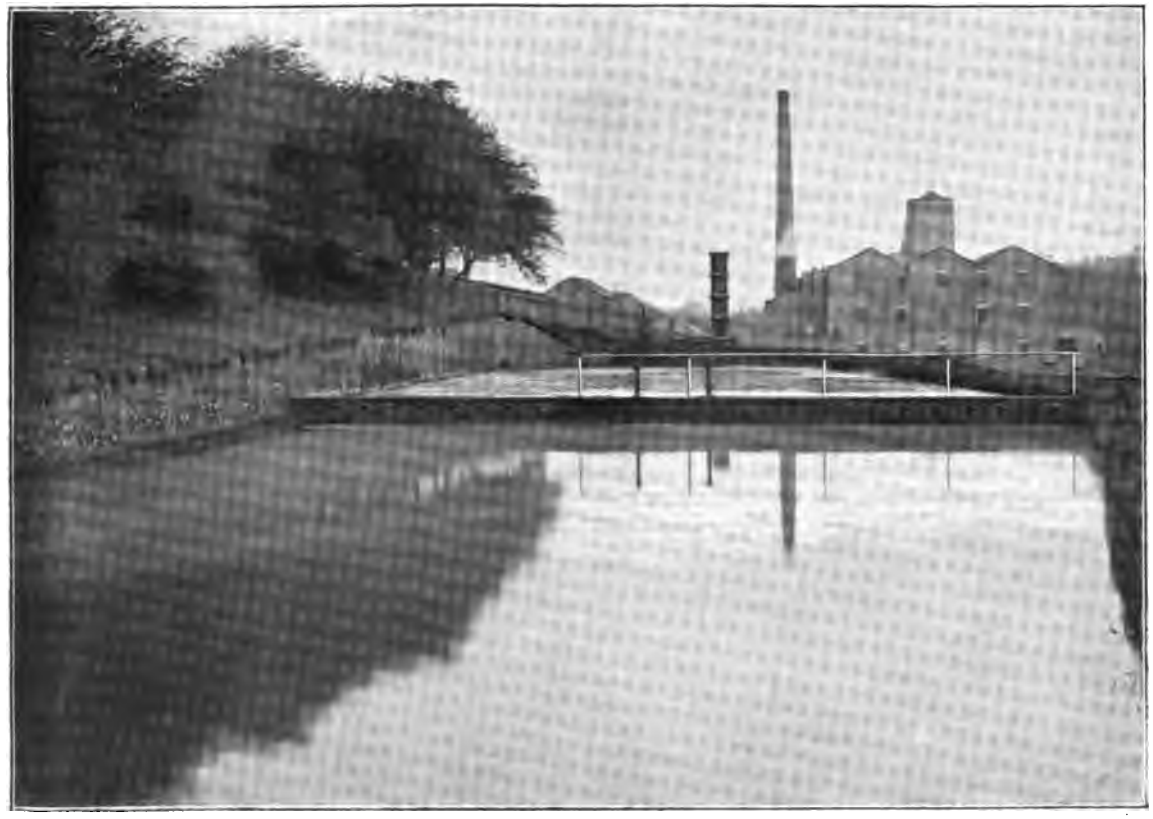

Precipitation Tanks with Furnace in Rear, Messrs Kearns Allen & Co., Boxenden.

[*To face page* 198.

DIAGRAM 21.

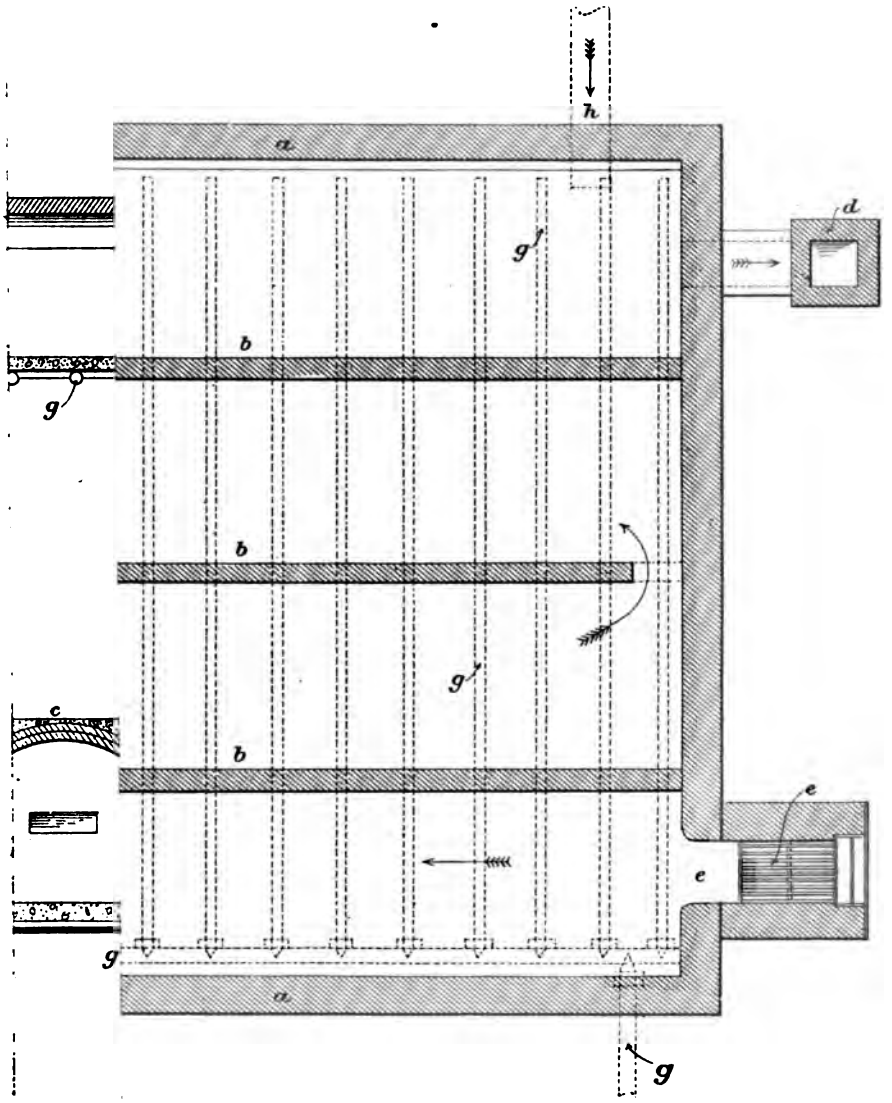

y Furnace.

[*To face page* 198.

RESULTS OF EXAMINATION OF EFFLUENTS FROM WORKS OF MESSRS STEINER & CO., CHURCH, LANCASHIRE.

Nature of Sample.	Analysis. No.	Date.	Parts per 100,000.									
			Dissolved Solids.			Suspended Solids.			Gross Solids.			
			Mineral.	Volatile.	Total.	Mineral.	Volatile.	Total.	Mineral.	Volatile.	Total	
Filter effluent,	2941	Nov. 15, 1898	130	39	169	1	2	3	131	41	172	Quite clear; slightly yellow in colour; neutral in reaction.
,, ,,	3166	Mar. 2, 1899	124	36	160	0	0	0	124	36	160	
,, ,,	3181	Mar. 14, 1899	114	43	157	0	1	1	114	44	158	
,, ,,	3634	Nov. 21, 1899	115	35	150	1	0	1	116	35	151	
,, ,,	3642	Nov. 24, 1899	105	34	139	1	0	1	106	34	140	
,, ,,	3828	Mar. 15, 1900	95	73	168	0	0	0	95	73	168	

"The tank *a* having been filled to suitable depth through the inlet *h* with the sludge, the fluid is allowed to drain, or partially drain therefrom; the furnace *e* is then lighted, and the heated air and flames from the furnace will pass in a serpentine direction (as shown by the arrows) over the surface of the sludge.

"As soon as the sludge has become sufficiently dry it may be removed through doors or manholes (not shown on the drawing), or if the sludge is of a combustible nature the operation may be continued so that the flame from the furnace will ignite the dried residue from the sludge, which will commence to smoulder and will burn itself gradually away to the other end of the tank without requiring any further fuel.

"When all the dried sludge has thus been burned away the calcined or residual sludge ash may be removed, and the apparatus is ready for another operation, as above described.

"Any unconsumed metallic oxides, or other valuable by-products that may be contained in the calcined residuum, may be eliminated or recovered therefrom by suitable known chemical processes, and re-utilised for manufacturing or commercial purposes.

"It will be evident that this improved apparatus is also equally applicable to the treatment of the sludge, slime or other deposit which results from the filtration of the effluent from sewage works, and other waters containing organic matters in solution. This matter produces an organic growth in a flocculent form, which in course of time becomes deposited on the surface of the filter bed, in the form of mud or slime, which chokes the pores of the filtering material, and under ordinary circumstances it becomes necessary, from time to time, to remove and renew the filtering material.

"By the use, however, of my improved means, artificial top heat being applied to the said filtering surface *in situ* without removal, this slime becomes carbonised, and the filter bed, being thus revivified, becomes as efficient as before, thereby greatly economising time, space, labour, and material."

This method has been in operation now successfully for three or four years. A sample of the calcined sludge from the use of lime as precipitant was found to contain the following:—

	Per cent.		Per cent.
Chromium sesquioxide,	56·23	Soda,	·60
Silica,	8·50	Copper oxide,	2·30
Alumina,	15·20	Tin oxide,	·43
Iron oxide,	9·94	Antimony oxide,	·24
Lime,	1·51	Sulphuric anhydride,	3·96
Magnesia,	·41	Chlorine,	·46
			99·78

The calcined sludge is mixed with lime and soda in the following proportions and fused:—

Furnace ashes, ...	240 lbs.
Lime unslacked, ...	160 ,,
Soda (pure alkali), . . .	60 ,,

After fusing the mass, three samples examined were found to contain equal to—

Chromium sesquioxide, .	(1) 18·9 per cent.
	(2) 19·8 ,,
	(3) 19·2 ,,

The mass is then extracted with water, the lixiviation liquors oxidised by means of sulphuric acid, and the bichromates caused to crystallise out.

Regelsberger* describes what is said to be a more economical method of recovery by means of an electric current. The chromium hydrates to be oxidised are mixed with alkaline chlorides and submitted to the action of the current; oxidising hypochlorites are immediately formed. A nearly saturated solution of alkaline chloride is used and a quantity of chromium oxide added equivalent to the current used in a given time. The following equation represents the action where the oxide is used, though either the chloride or sulphate may be substituted:—

$$Cr_2(OH)_6 + 2NaCl[+6NaCl] + 2H_2O = Na_2Cr_2O_7 + 8H + 2Cl[6NaCl].$$

When potassium chloride is used as the electrolyte, bichromate crystals fall out from the warm solution, but in the case of sodium chloride being used, separation must be effected. The method is evidently too precise and complicated for any bye-process.

* *Chem. News*, No. 2125, vol. lxxxii.

CHAPTER VIII.

PAPER MILL REFUSE.

THE basis of all papers is vegetable fibre or cellulose, the crude material, so far as the papermaker is concerned, being wood-pulp, esparto grass, linen cuttings, cotton cuttings, rag, bagging, straw, tarpaulin, ropes, peat, etc.

His object is to divest the raw material of the matters associated with the cellulose—resins, gums, silica, fats or oils, in the case of grasses; grease, colouring matter and adventitious dirt, in the case of other material.

The general process may be summarised as—

(1) Dusting and picking.
(2) Boiling the raw stuff with alkali—to saponify fats, form resinates and soften the fibres.
(3) Washing the raw stuff after boiling, now termed half-stuff.
(4) Breaking up half-stuff to pulp and washing in breaking engine.
(5) Bleaching the washed and pulped half-stuff.
(6) Further pulping and washing the bleached stuff.
(7) Passing pulp (after sizing, colouring, loading and mixing) through paper machine, in which it is strained, layered, rolled, calendered, and cut, emerging as paper.

The solid waste from process No. 1 may be taken away as manure or incinerated.

That from No. 2 (the soda liquors) is grossly polluting, while on the other hand the alkali therein may be profitably recovered. The strength of the fresh soda liquor added varies with the nature of the raw stuff. For rags, 5 per cent. to 10 per cent. of the weight in caustic soda is added for high pressure boilers.

For esparto grass about 20 per cent. of the weight in caustic soda, according to the nature of the grass, the actual concentration of the liquor varying between 6° and 16° Twaddell. The strength is reduced in boiling to about 4° to 6° Twaddell, and is further reduced by the wash-water from the boiled grass to between 2° and 4° Twaddell.

Mill.	Soda Liquor before Addition of Wash Waters.		Liquor after Addition of Wash Waters.	
	Degrees Twaddell.	Temp.° F.	Degrees Twaddell.	Temp.° F.
Spring Vale, Darwen, .	7	100	6	100
Hollins', Darwen, . .	7	100	2	100
Sun, Feniscowles, . .	6	100	4¼	100
Star, Feniscowles, . .	10	100	...	...
Woolfold, Bury, . .	7	100	3½	100
Gigg, Bury, . . .	7	100	2½	100
Hall i' th' Wood, Bolton,	12	100	6	100
Whiteash, Church, . .	...	...	4	100

The soda can be recovered from these liquors by evaporating off the water and incinerating the residual thick liquors.

The commonest and probably the most economical form of evaporator is the multiple effect vacuum evaporator, the principle of which may be here described, as it is referred to in the consideration of both wool fats and glycerine.

A pound of water requires, at atmospheric pressure and 32° F., (212 – 32) = 180 units of heat (B.T.U.) to bring it to the boil. To completely convert it into steam 966 further units are required. Total, 1146 units. This steam formed will give out the 966 units again on being condensed to water. That is to say, if 966 pounds of water are used for condensing 1 pound of steam at 212° F. and atmospheric pressure, these 966 pounds will be raised 1°, 483 lbs. 2°, and so on, the condensed steam remaining at 212.° One pound of water at 32° F. would be raised to 212°—boiling point, and (966 – 180) = 786 units would remain in the steam, of which $\frac{180}{966}$ or ·186 lb. only would be condensed.

Now the boiling point of water varies with the pressure, being lower at lower pressures, and *vice versa*.

At a vacuum of 5 inches of mercury or –12·2 lbs. per square inch, the boiling point is 134°; 10 inches mercury or –9·8 lbs. per square inch, 162°; and, at 15 inches mercury or –7·3 lbs., 180°.

Moreover, as the heat-absorbing or conducting power of water varies with the temperature, the total number of units required to vaporize it or convert it into steam varies also—the latent heat of steam.

But this quantity of heat for a pound of water is

$$1115{\cdot}2-(\cdot 708 \times t),$$ where t is the boiling point in degrees F.

Taking the three temperatures above, therefore, the latent heat, or units required for steam conversion, would be—

	Pressure in inches of Mercury.	Boiling Point.	Latent Heat.
			Units.
C	5	134° F.	1020
B	10	162° F.	1000
A	15	180° F.	987
D	29	212° F.	966

Now let it be assumed that there are three closed vessels, A, B, and C, containing water at the temperatures and pressures as indicated in the above table. If a pound of steam be delivered from D at the higher temperature into A, out at the lower, it will be condensed to a pound of water at 180°, but in the act will yield $966 + (212 - 180) = 998$ units of heat, more than sufficient to convert one pound of the water in A into steam; and if this steam be mechanically drawn away so as to constantly maintain the pressure in A at 15 inches, one pound of it delivered into the vessel B would condense to a pound of water at 162°, yielding $987 + (180 - 162) = 1005$ units, sufficient to convert one pound of water in B into steam; and if again a pound of this steam were conducted into the vessel C, it would be condensed to a pound of water at 134°, yielding in the act $100 + (162 - 134) = 1028$ units of heat, more than sufficient to convert a pound of the water in C into steam. Thus we get three separate pounds of water converted into steam, and the final conditions are pretty much as at the start.

But the arrangement of the triple effect evaporator is such that the steam condensed is not allowed to mix with the water already existing in the vessels; it is conducted away separately, and thus for the trouble or expense of maintaining the vacuum and the difference in temperature, three pounds of water are evaporated at the expense of the one pound of steam injected, or as many pounds as there are pans.

The liquors for concentration are conducted from the one vessel and through the other, enclosed in circulating tubes, and the steam played and condensed on the outside of the tubes, a vacuum being maintained within. A complete arrangement is shown in fig. 90—that of Messrs Fawcett, Preston & Co., Ltd., Liverpool.

The liquors are concentrated first, to some extent, in the steam generator A, and afterwards delivered by means of the feed engine E into the first pan C′, *inside* vertical tubes, the steam from the generator A surrounding these, in jackets.

What condenses in these jackets is conveyed by gravitation to a reservoir F, while the steam from the liquor itself is drawn over through the jackets of the next pan C″ *via* the tube H, being condensed to some extent by the cooler liquors therein, but evaporating water from these, by raising the temperature. This operation is repeated in all pans up to last, C^{iv}, for which a special condenser, D, of cold water is provided.

B is the feed engine for crude liquor to the steam generator, and E the air pump or vacuum engine. The liquors are kept on the move from the first to the last pan, entering the first at from 2° to 4° and leaving the last at about 46° Twaddell, being reduced to about one-sixth in bulk.

The weight of water evaporated per pound of coal with a triple effect is from 30 to 40 lbs., according to the mechanical efficiency of the engines and pumps and the calorific efficiency of the primary generator A.

At the Darwen Mill of Messrs Dimmock in 1893 one week's working averaged—

Time.	Strength Twaddell at 60° F.	Total Galls.	Coal.	Ash recovered.
122 hours	6 in, 44 out	143,565	33·75	10

Another interesting form of evaporator is the 'Yaryan' multiple effect (figs. 91 and 92), very suitable for weak liquors.

The crude liquors are received in tank B, fig. 91, diagram 22, and are fed upwards by delivery pipe *m* from the feed pump C through a series of feed water heaters *p*. Each of these is connected with the contiguous pan or

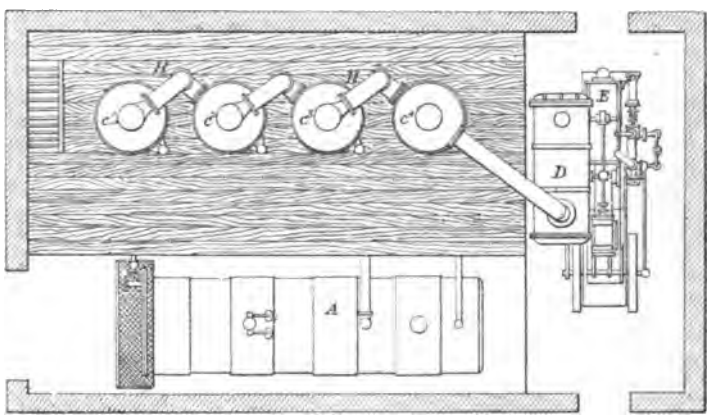

FIG. 90A.—Plan.

'effect,' the evaporated steam from which is circulated through it for the purpose of both raising the temperature of feed and increasing the vacuum in pan—in short, the feed is used to some extent instead of cooling water, with the double advantage of power saved and the heat usually carried away by cooling water utilised. The crude liquor then enters the highest 'effect' at D.

From thence it passes through the interior of the horizontal tubes H, emerging at X into a separator or steam trap I, and after the separation of steam, *via* Z, into the next pan. The first live steam charge is delivered at F, in chamber G, outside the tubes H, the water of condensation being received at H', and the generated steam from liquors under concentration

RESULTS OF EXAMINATION OF EFFLUENTS FROM WORKS OF MESSRS STEINER & CO., CHURCH, LANCASHIRE.

Nature of Sample.	Analysis. No.	Date.	Parts per 100,000.									
			Dissolved Solids.			Suspended Solids.			Gross Solids.			
			Mineral.	Volatile.	Total.	Mineral.	Volatile.	Total.	Mineral.	Volatile.	Total	
Filter effluent,	2941	Nov. 15, 1898	130	39	169	1	2	3	131	41	172	Quite clear; slightly yellow in colour; neutral in reaction.
,, ,,	3166	Mar. 2, 1899	124	36	160	0	0	0	124	36	160	
,, ,,	3181	Mar. 14, 1899	114	43	157	0	1	1	114	44	158	
,, ,,	3634	Nov. 21, 1899	115	35	150	1	0	1	116	35	151	
,, ,,	3642	Nov. 24, 1899	105	34	139	1	0	1	106	34	140	
,, ,,	3828	Mar. 15, 1900	95	73	168	0	0	0	95	73	168	

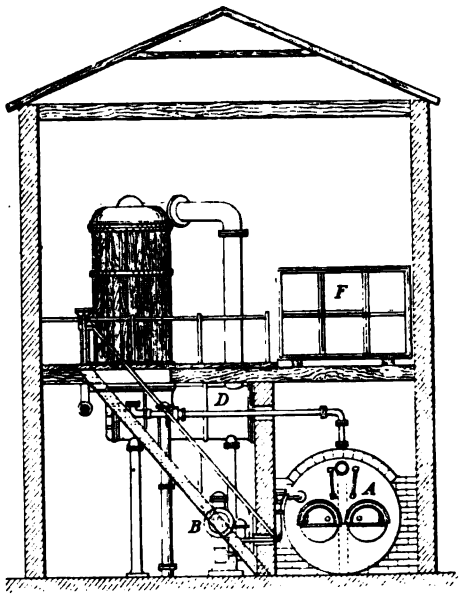

FIG 90B.—End Elevation.

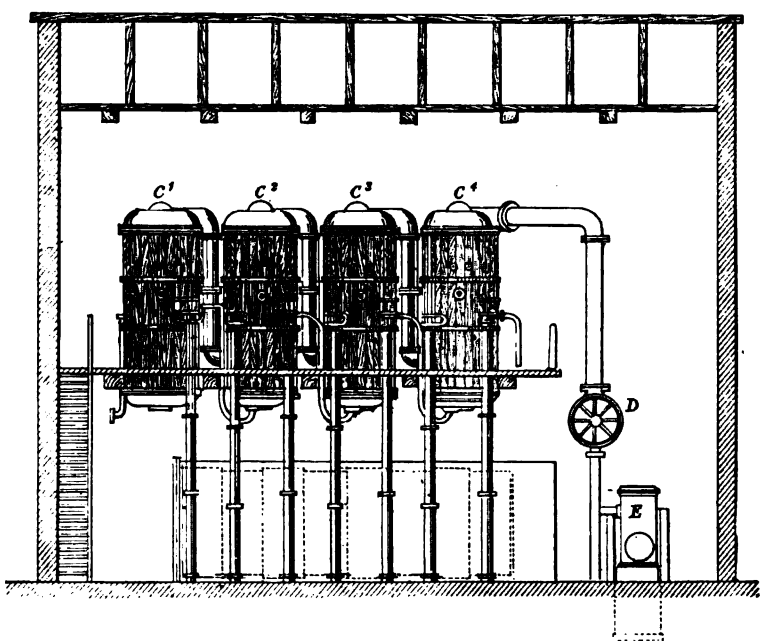

FIG. 90C.—Elevation.
Messrs Chapman & Fawcett's Multiple Effect Evaporator.

DIAGRAM 22.

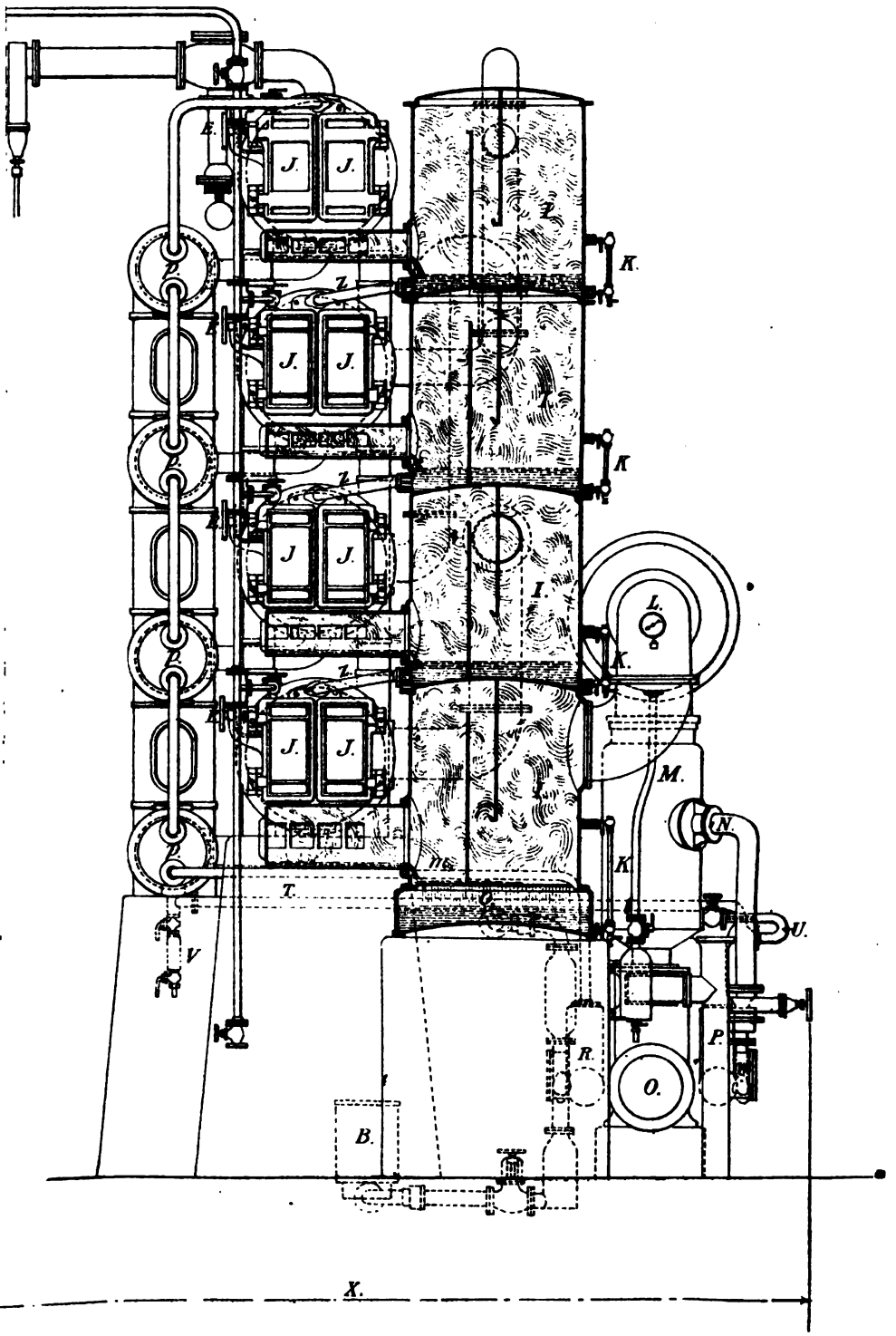

[*To face page 206.*

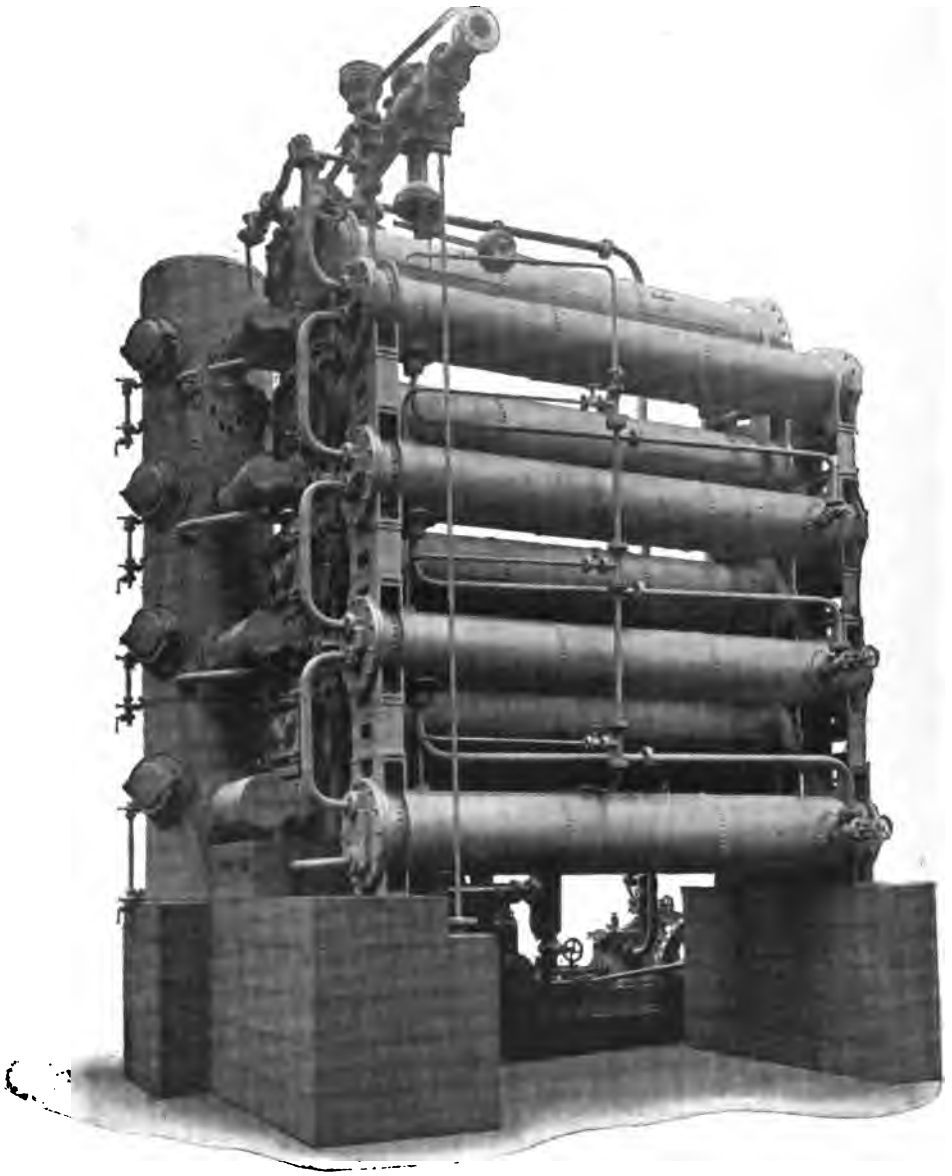

FIG. 92.—The 'Yaryan' Multiple Effect Evaporator.

conveyed to the next pan, from separator I *via* tube Q', and so on to the final separator, where the resultant vapour is drawn by means of vacuum pump O to condenser M *via* outlet L, and the concentrated liquor discharged.

S, S, are simply drip pipes from heaters.

The concentrated liquors are received in tank Q, and the other letters in the diagram show the parts as follows :—

J, Door for access to interior of chamber G.

K, Gauge glasses.

P, Discharge pipe from vacuum pump.

R, Pump for withdrawing concentrated liquor.

V, Sampling point for drip water.

C, Concentrated liquor discharge.

E, Handwheels for valves.

TUW, Drain water pump and connections.

L and *f*, vapour and air connections to condenser.

In the first vessel a steam pressure of 5 lbs. is usually maintained on the outside of, and normal pressure within, the tubes. The steam raised from the first pan is conveyed from the separator I to the outside of the tubes in the second pan, where the liquors are boiling in a vacuum of 8 inches of mercury. The steam generated at this pressure is conveyed to the outsides of the tubes in the third pan, and a vacuum of 18 inches maintained within. The steam at this pressure is conveyed to the outside of the tubes in the fourth pan, and a vacuum of 27 inches maintained within.

Both vacuum and multiple effect evaporators as used in England would be much more commonly met with were it not for the expense of installation.

A cheap, economical, and effective form is used largely on the Continent, known as the Kestner evaporator. It may be used singly, as in fig. 93, or with double or triple effect (fig. 94). The contrivance consists of the crude liquor tank A, the return liquor tank B, both open and on the ground, the suction pipe C, which is surrounded by the steam pipe D, the air and vapour pump E, the return pipe H, and condenser F.

A vacuum is maintained above the suction pipe by means of the air pump E and cold water circulation K, if single effect; but if multiple effect, the steam from the evaporation of the crude liquor is conveyed to the steam jacket of the second tube without condensation. As the condenser and suction from air pipe are placed above the barometrical height of the evaporating tube, the discharge of the liquor into the return pipe is unimpeded. The rising bubbles in the suction tube 'swish' the liquid about, so assisting the evaporation, and the low temperature prevents incrustation.

At I, are live steam pipe connections for jacket, and at K for forced or gravimetric circulation.

In dealing with liquors of low specific gravity the multiple effect

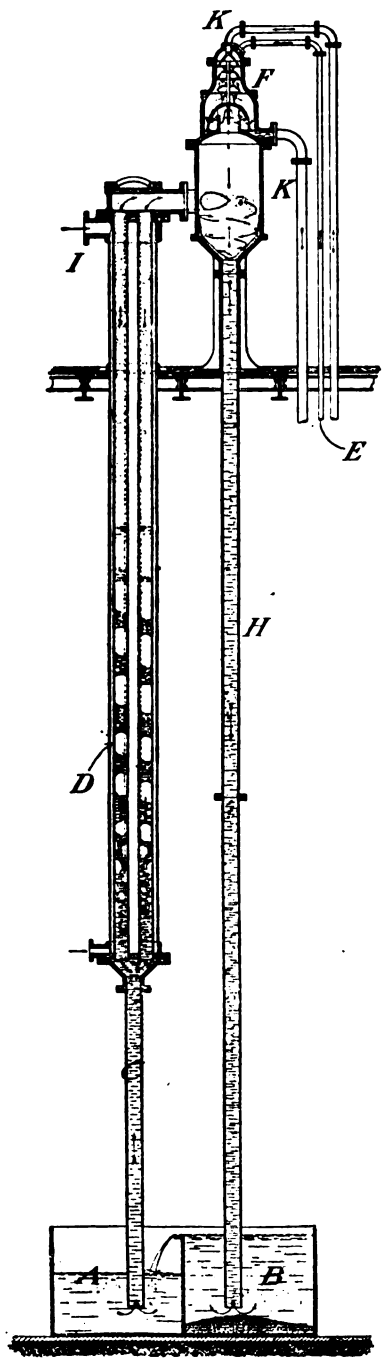

FIG. 93.—Kestner Barometric Evaporator.

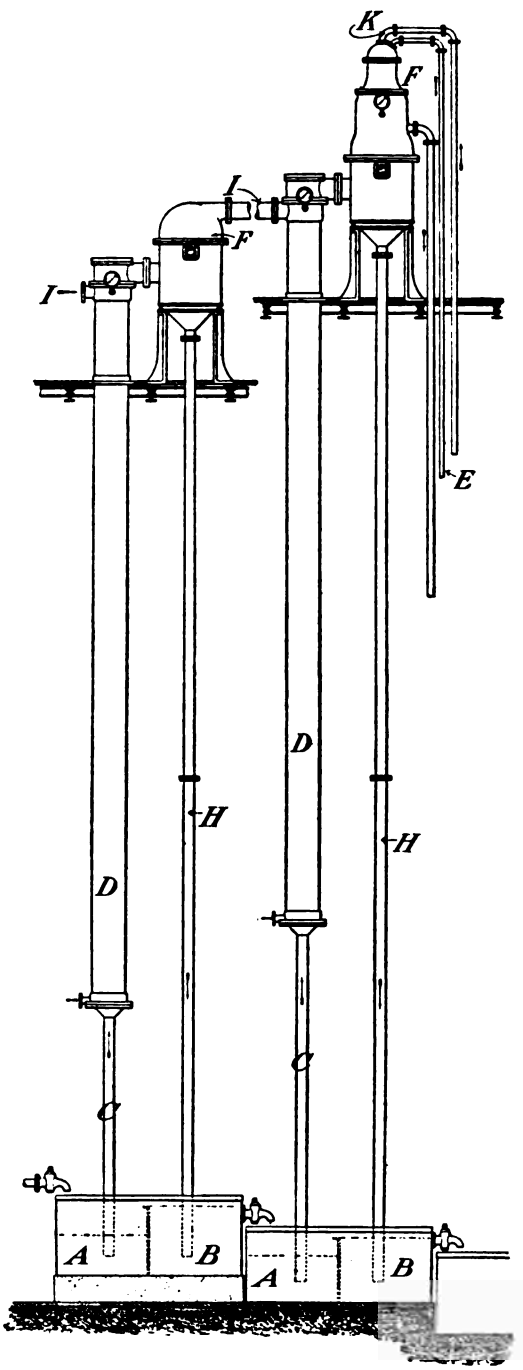

FIG. 94.—Kestner Barometric Evaporator.

evaporators are decidedly advantageous as compared with open pans; but for liquors of a gravity over 20° or 30° Tw. an open pan competes very favourably.

In any event, the last traces of water have to be expelled in open pans directly fired.

The Porion evaporator, illustrated in fig. 95, is a very suitable one for dealing with fairly strong liquors.

There are no figures given in Mr Davies' paper on the Porion evaporator read before the Scottish Paper Makers' Association, November 1888, from which the amount of coal could be calculated which would be required to reduce liquors from, say, 2° Tw. to 40° Tw. (100° F.), the point at which they enter the incinerator proper, nor any means known whereby this could be calculated in practice, for it would probably be contended that the reduction was brought about by waste heat from the Porion. But the tendency will be to make liquors weaker and weaker by washings in the future, to prevent rivers pollution, and it appears that a point may be reached beyond which it would be more economical to resort to multiple effect evaporation for the earlier stages, than to extend the weaker end of the Porion further. This is evidently Mr Davies' opinion, as expressed in the paper referred to above:—

"In the early days of soda recovery, the lyes evaporated in paper mills and other factories were very strong, the weaker liquors being turned into the nearest streams, but the continual desire to prevent pollution of our rivers has led to weaker lyes being evaporated. The subject comes to us therefore under a new set of conditions. Manufacturers may be inclined to ask whether these altered conditions have changed our views with regard to the efficiency of the Porion system. Our reply will, we hope, be clear and definite when we say—Give a Porion evaporator liquor at 10° Tw. and at 100° F. and it will 'beat the record,' for profit, of any existing evaporator. If there is any merit in multiple evaporation, and we believe there is, up to a point, it would be in so arranging the plant that all the strong liquor is treated direct in a Porion, the weaker liquids being concentrated to 10° Tw. and 100° F., and then handed over to the Porion to finish. Under any system of recovery, furnaces or calciners are required: the Porion chamber is simply an addition to these, and is by no means costly in itself, and will stand for many years without repairs. Multiple evaporation has been heretofore clouded with too many specious statements; it is too often overlooked that expensive furnaces are required beside the multiple effect stills and the steam boilers necessary to supply them with steam. Nevertheless, it is often a decided economy to employ multiple effect stills, as we have said before, up to a certain point, and that point is a concentration to 10° Tw. at 100° F.

"When the Porion apparatus is properly in action, the spent lye from

the mill is either pumped up or run continuously into the pan Z (fig. 95) over the combustion chamber *c*. This liquor will most probably enter the pan at a temperature of 100° F., and leave it heated to the boiling point, and also concentrated by about 3° Tw. The outflow of boiling liquor from this pan is constant, so that a regular stream finds its way into the Porion chamber K, where a constant level is maintained upon the floor by means of an automatic regulating door. In this Porion chamber K at the points *i i*, sets of fanner blades are placed, and these are made to revolve rapidly so as to throw up a spray or rain-shower of the liquid undergoing evaporation,

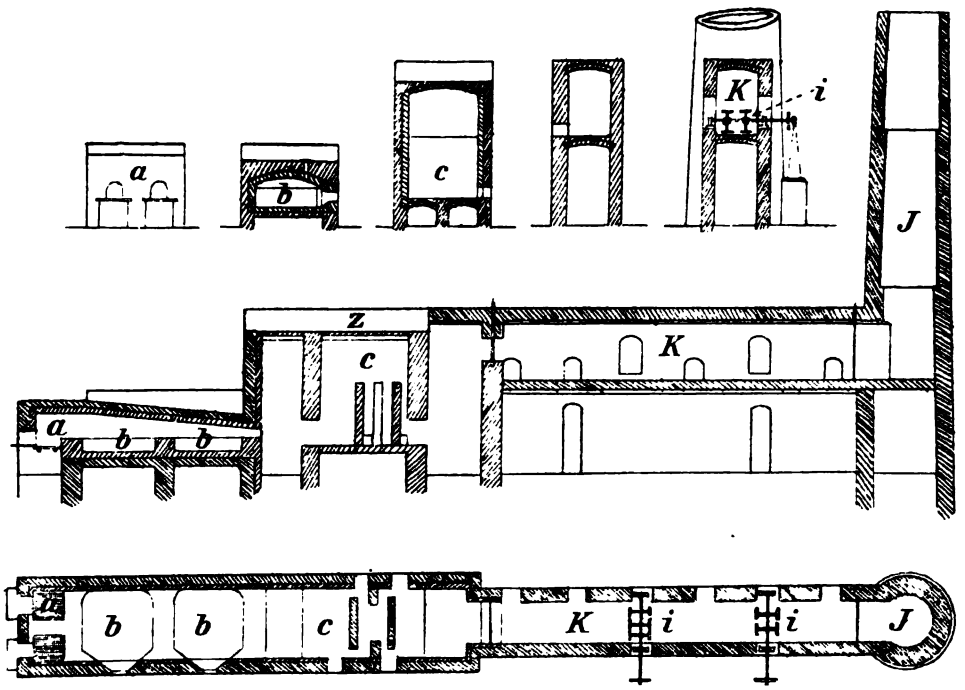

FIG. 95.—Porion Evaporator.

and it is through this rain-shower that the hot gases from the combustion chamber *c* pass on their way to the chimney. The immense evaporative effect of this chamber may be appreciated when it is known that at the Inveresk Mills 24,000 gallons of lye are being concentrated daily to 5700 gallons, at which point it is ready for the calciners, and it is not policy to continue the concentration beyond 40° Tw. at 170° F., which is equal to 50° Tw. at our standard temperature of 100° F.

"Thus far we have considered the preliminary concentration, which has all been effected with the waste heat of the furnaces. The next step is the

expulsion of the remaining water, and the destruction of the organic matter on the hearths of the calcining furnace. The liquor comes on to the hearth of the calciner *b* in a very concentrated condition, and the heat quickly forms a semi-solid layer on its surface. This crust requires to be constantly removed, in order that the heat may come in contact with the liquor. In most evaporators when the liquor has crusted over in this manner a very large amount of heat is escaping by the chimney; but with the Porion, no matter how wastefully the fuel may be burnt in the furnaces, the Porion chamber catches it all, and not only catches it, but does useful work with it.

"When the charge is on the calciner bed the organic matter it contains is destroyed and takes fire, but in the ordinary way the combustion of these gaseous products is by no means complete, as in passing over the back bed the large amount of watery vapour present checks the combustion, so that if the gases from the beds were passed direct into the Porion chamber a great deal of fuel material would be lost. This is the reason why the combustion chamber *c* has been introduced, and there is but little doubt that it assists in the economy of fuel.

"It has been proved that, in the Porion chamber, 11½ lbs. of water may be evaporated per pound of fuel, and 8 lbs. of water for every pound of dry organic matter burnt from the liquid itself, so that it is possible to find the least amount of coal which must be burned in the fireplaces to evaporate the whole of the water contained in liquors of various densities. Reckoned on the coal alone, the Porion seems to yield an evaporation of 21 lbs. to 22 lbs. of water per pound of fuel, when working with strong paper-mill liquors; but much of the evaporation is effected by the organic matter which these liquors contain. The effect of dilution upon the fuel bill, especially with liquors of low degree of density, is very marked; the reduction of the degrees Tw. from 10° to 5° does not double the amount of fuel required for evaporation, but trebles it, and this must be the case with every evaporator.

"The following table shows the capacity of the various sizes, their approximate cost, and the number of tons of ash they will recover weekly from paper-mill lyes of various strengths:—

Capacity in gallons per 24 hours.	Approximate Cost of complete Installation.	° Tw. at 100° F. Tons per week of 40 per cent. Ash.								
		2°	3°	4°	5°	6°	7°	8°	9°	10°
5,000	£400	1	1½	2	2½	3	3½	4	4½	5
10,000	500	2	3	4	5	6	7	8	9	10
15,000	600	3	4½	6	7½	9	10½	12	13½	15
20,000	650	4	6	8	10	12	14	16	18	20
25,000	700	5	7½	10	12½	15	17½	20	22½	25

"Of course, the cost of building a Porion will vary according to the locality in which it is erected; but as the major portion of the plant is constructed of common bricks, the variation in price is not so great as may, at first sight, be conceived. The bulk of the ironwork consists of old railway metals, with which the furnaces are braced up, the remaining expenses being but slight.

"The amount of fuel used in the Porion furnaces naturally depends upon how much fuel matter there is in the liquid to be evaporated. With liquors similar in composition to the waste paper-mill liquor it requires about 32 cwts. of slack per ton of ash recovered from liquors at 8° Tw. at 100° F., or two tons of slack when the liquors are 6½° Tw. at 100° F. The actual wages for the calciners amounts to 5s. per ton on the ash drawn, to which one shilling more should be added for incidental expenses, so that the revenue and expenditure account for a 25,000 gallon Porion working 10° Tw. liquor at 100° F. would stand as follows:—

Expenditure—				Revenue—			
Interest on capital, 5% on £700,	£35	0	0	Recovered soda-ash, 1250 tons at 40%, equal to 862 tons of 58% soda-ash, at £6 5s. per ton,	£5837	10	0
Depreciation, 10%,	70	0	0				
Repairs,	125	0	0				
Wages at 6s.,	375	0	0				
Fuel, 2000 tons at 8s.,	800	0	0				
Balance, profit,	3982	10	0				
	£5387	10	0		£5387	10	0"

The very extensive use of wood pulp in news mills has shut down many evaporators within the last few years, but whether this will continue long is doubtful, as already complaints are being heard concerning the poor quality and very temporary character of much of the paper in daily use.

Rag, to a greater extent at any rate, will in great likelihood be called for soon, and in any case the Kestner evaporator could be used for the small quantity of soda required.

The treatment of both rags and esparto or straw after boiling with soda consists of 'breaking' and 'beating.' The characters of the effluents from these machines vary with the class of rag—clean or dirty—and the point of time in the process of washing.

The results (see Table, p. 214) of examinations of wash waters from a mill using both rag and esparto are sufficient to show their objectionable nature.

In the process of boiling, rags generally lose about 5 per cent. to 10 per cent. of the weight of fibre, and about 20 per cent. on the dry weight, or 30 per cent. altogether.

For the purpose of arriving at some idea as to the actual loss and amount of solid matter carried away to the purification plant from the

SOLIDS IN PAPER MILL WASH—Parts per 100,000.

Date.	Nature of Sample.	Dissolved Solids.		Total Dissolved Solids.	Suspended Solids.		Total Suspended Solids.	Total Solids.
		Mineral.	Organic.		Mineral.	Organic.		
March 9, 1893.	Samples from beating and washing machines taken every five minutes and mixed,	152·2	110·5	262·7	32·1	63·9	96·0	358·7
March 9, 1893.	Samples from breaking and washing machines taken every five minutes and mixed,	18·6	18·3	36·9	8·1	29·8	37·9	74·8

various paper raw materials, carefully selected and representative samples of about 30 grammes were taken. The mean results are given on page 215.

The back water from the machine is the next polluting liquid in any quantity, but this ought to be thoroughly and completely settled in the mill and the whole of the solid matter—really paper—recovered.

The Fülner tank referred to in Chapter II. is one common form of

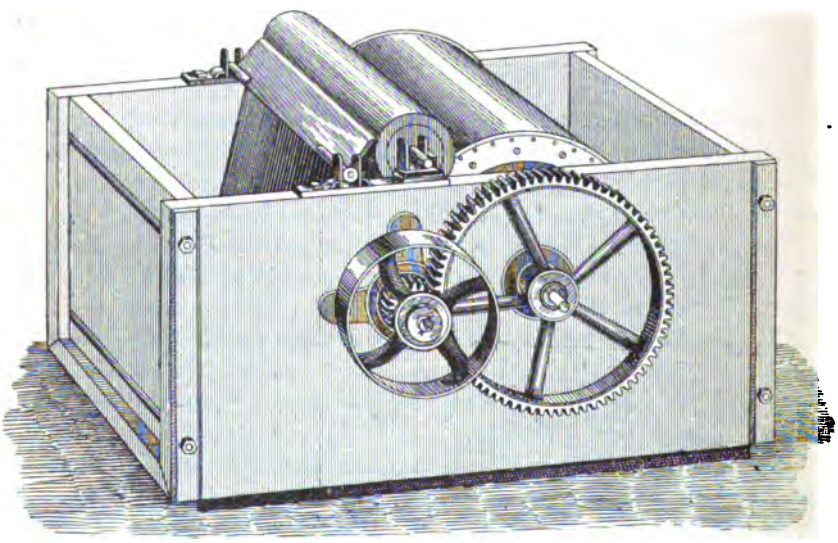

FIG. 96.—Wandel's Fibre Catcher.

recovery tank, and may be preceded by a Wandel's fibre catcher (fig. 96). In this the back water on its exit is caused to pass through a revolving

TABLE SHOWING AMOUNTS OF MATTER (OTHER THAN FIBRE) WASHED OUT OF PAPER RAW MATERIALS.

Description of Raw Material.	(1) First Weight (Raw Material).	(2) Weight after Drying.	(3) Moisture = (1)-(2).	(4) Weight after Boiling and Washing.	(5) Weight washed out = (2)-(4).	Percentage of Fibre.	Percentage washed out.	Percentage of Moisture.
	Grammes.	Grammes.	Grammes.	Grammes.	Grammes.			
Esparto grass, boiled with 200 c.c. of 6 per cent. solution of soda at 20 lbs. pressure for three hours,	28·007	25·372	2·635	11·342	14·030	40·5	50·1	9·4
Old rags, boiled with 10 per cent. of weight of soda at 28 lbs. pressure for three hours,	29·5235	27·4645	2·059	22·6975	4·767	77·0	16·1	6·9
New rags, boiled with 10 per cent. of weight of soda at 26 lbs. pressure for three hours,	28·1935	26·0735	2·120	20·755	5·3185	73·7	18·8	7·5
Rope and sacking, boiled with 10 per cent. of weight of crude rope, of lime weighed as CaO, at 25 lbs. pressure for three hours,	32·538	28·8245	3·7135	20·2340	8·5905	62·2	26·4	11·4
Tarpaulin, boiled with 14 per cent. of weight of tarpaulin taken of NaHO, at 30 lbs. pressure for three hours,	28·6710	26·650	2·021	11·388	15·262	39·7	52·8	7·5

cylindrical mesh. The fibre settles on the cylinder externally and is periodically thrown off by a scraper or 'doctor' into the stuff box by means of a cam actuated reel.

The whole of the back water suspended content may be saved by means of the fibre catcher and *capacious* settling tanks. The latter, however, should be sufficiently large and sub-divided to permit of a change of colour at short notice.

The total waste emerging for treatment may therefore be said to consist of a liquor containing the rough dirt, sand, soaps, lime, clay, soda, and fibre from the breaking engines, fibre and chlorine liquor from the beaters, fibre, china clay, size, alum and colouring matter from the back water. The treatment as detailed in Chapter II. is therefore—

1. Settlement (simple or by means of precipitants).
2. Sludge abstraction.
3. Filtration (if not thoroughly clarified by settlement).

Representative installations of plant for this purpose are:—

Darwen Paper Mill, Darwen.—The precipitation tanks here (fig. 97, diagram 23, and Pl. XVIII.) consist of two comparatively shallow roughing or preliminary tanks, *a*, about 8 feet deep (the crude liquors being delivered from the pumps at point *b*), and two deeper tanks, *e* and *f*, about 14 feet deep. The top liquor is drawn off by means of floats and delivered into well *h*, and the sludge delivered by means of pumps on to a waste heap beyond the confines of the mill. The suspended solids in final effluent average 3 parts per 100,000.

It will be seen that the walls are not of the strength shown to be requisite according to the rules in Chapter II., but they are well buttressed and embanked and rarely filled in the cases of tanks *e* and *f* to within three or four feet from the top. Effluent 500,000 gallons per diem.

Wansborough Paper Co., Ltd., Cheddar.—The crude liquors are delivered at the point *a* (fig. 98), and are capable of being diverted either through tanks *b*, *c*, *e*, *f* and *g*, continuous flow, or *d*, *h*, *i*, *g*, *k*, or indeed through other combinations by means of hand valves according as one tank is more or less charged with sludge. The supernatant liquor is drawn off by means of floating arms provided in each tank. The tanks *d* and *b*, and *h* and *c*, have a joint outlet to the river laid under the concrete floor. G has its own outlet to the river, while *f*, *e*, *i*, *j*, and *k* empty into a channel L communicating with the river. Below this channel L is a pipe which receives the sludge from all tanks direct with the exception of *b* and *d*, and conveys it to the well M. That from the tanks *b* and *d* is conveyed by a separate pipe *p* to the same well, from which it is lifted by a pump and delivered into a compressed air ram for pressing as described in Chapter II. No filters are provided.

PLATE XVIII.]

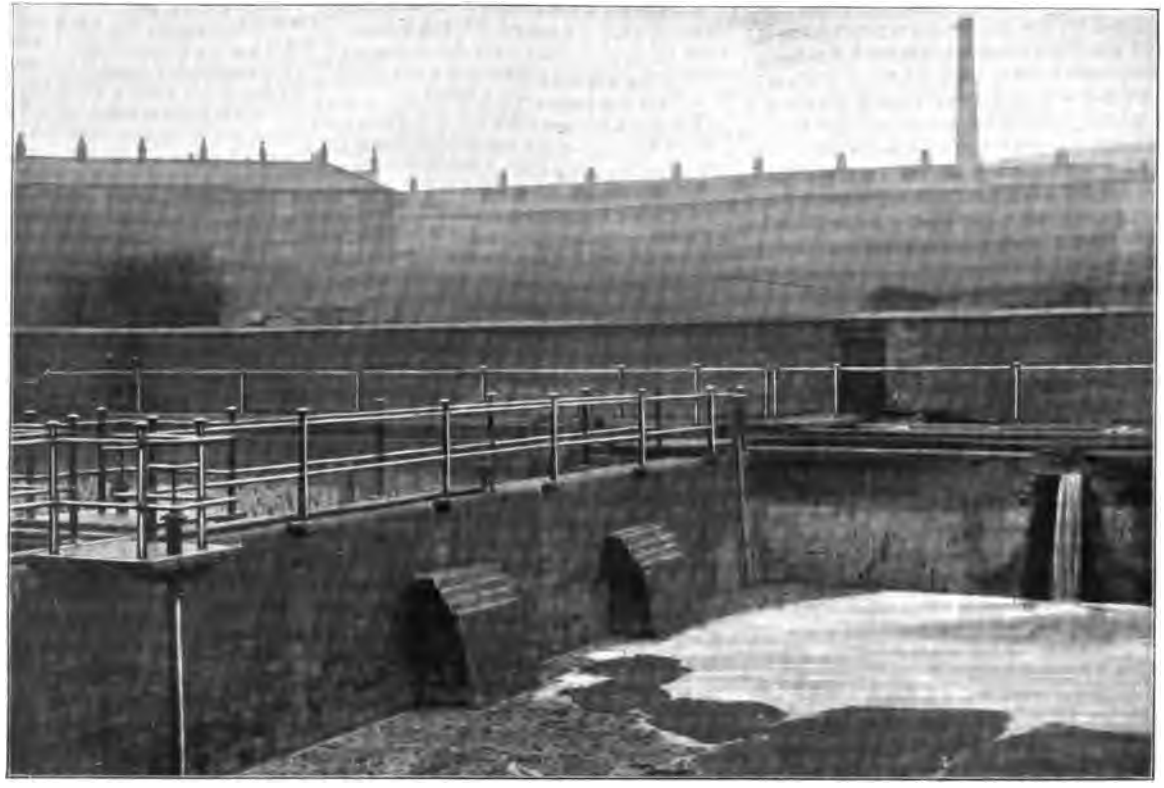

Darwen Paper Mill Precipitation Tanks.

[*To face page* 216.

SECTION C D

DIAGRAM 23.

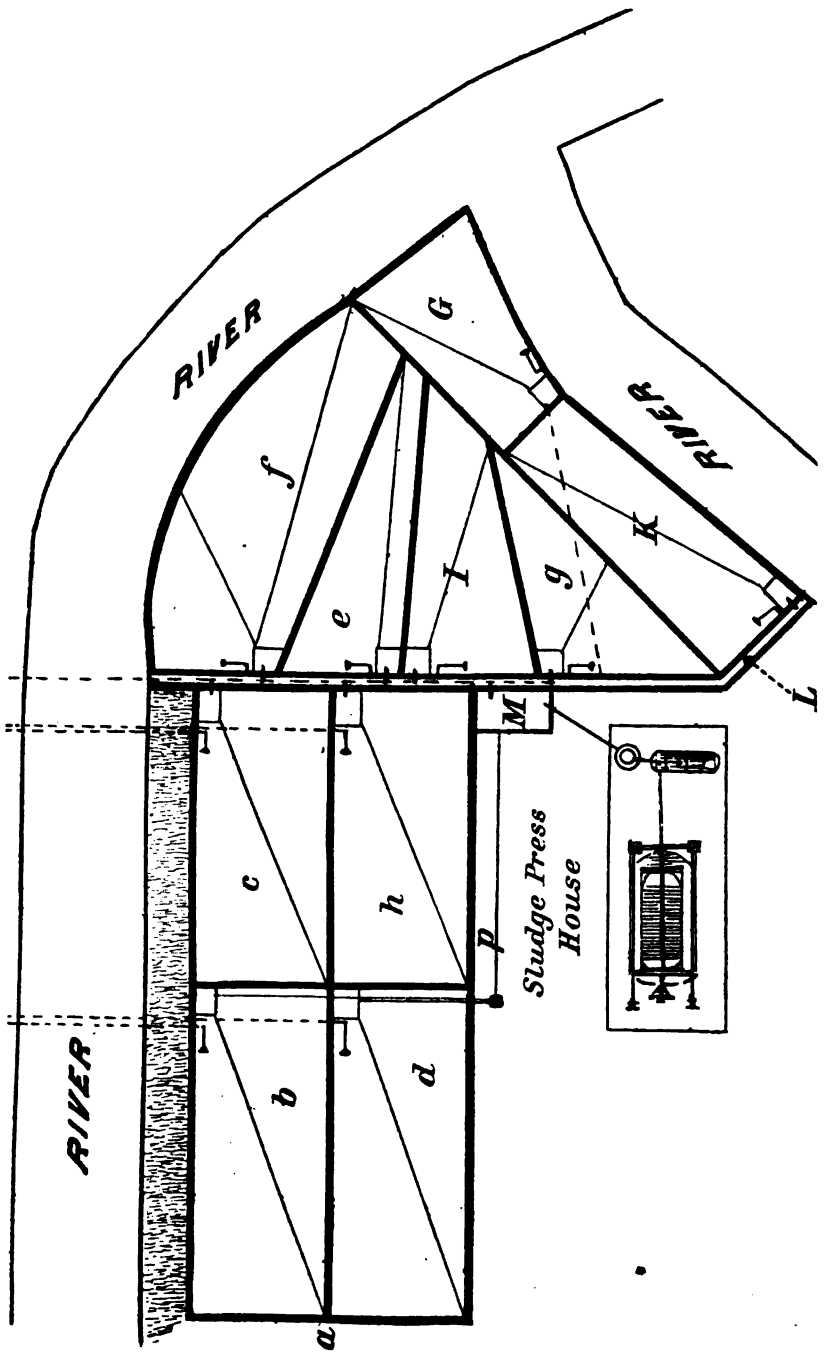

FIG. 98.—Tanks and Sludge Press, Cheddar Paper Mill, Somerset.
Scale 80 feet to an inch.

The whole of the pressed sludge is used over again in the making of coarse brown paper. Effluent 250,000 gallons per diem.

Messrs Baldwin & Co., King's Norton, near Birmingham.—The plant here (fig. 99, diagram 24) erected by Mr J. E. Wilcock, A.M.I.C.E., deals with the refuse of a white mill having an effluent of 300,000 gallons per diem. The whole of the waste water from the works enters the old roughing tanks at point marked A′ on plan, where milk of lime is added, and a considerable proportion of the suspended matter is thereby deposited in these tanks.

The partially clarified and alkaline effluent is then passed into the four new tanks, where carbonic acid gas is blown through it from coke stoves by means of perforated pipes laid at the bottom of the tanks on Mather & Platt's system.

After this it is allowed to stand for some time until the remaining suspended matter is deposited, and the effluent is then drawn off by floating arms and discharged into the stream without further treatment.

The sludge is pumped on to a sludge tip, where it is air dried in shallow beds about two feet deep.

The clarification obtained by this process is said to be so satisfactory that only one grain per gallon of solid suspended matter remains in the effluent; and since the new tanks have been put in, actions at law which were pending have been allowed to drop.

There are no filters in use, but numerous experiments were carried out some years ago by Dr Bostock Hill and Mr Willcox with filters composed of sand, gravel, polarite, and ashes; it was found impossible to obtain satisfactory results with any of these, owing to the tank effluent being so strongly alkaline that the filters very rapidly became clogged and useless.

The Burnley Paper Co., Ltd.—The plant shown in fig. 100 and Pl. XIX. deals with 300,000 gallons per diem from a brown mill. The crude liquors are first passed through the low level series of tanks *a*, in which a large proportion of the heavier suspended solid matter is deposited, and from which tanks it gravitates as heavy sludge into the well *b*. The supernatant liquor, both from floats and a continuous flow, is delivered into the pump well *c*, from whence it is lifted into the high level tanks *d*. The supernatant liquors from these flow directly to the river, while the sludge gravitates to ejector well from which it is delivered, as is also contents of well *b*, to the compressed air ram for pressing. The suspended solids in final effluent average 8 parts per 100,000, but no filters have yet been provided.

Sun Paper Mill Co., Blackburn.—The plant here (fig. 101, diagram 25, Pl. XX.) is referred to in Chapter II. as being defective in construction, but so far as the actual deposition of suspended solids is concerned they are very efficient. The liquor treated amounts to about 500,000 gallons per diem, but owing to the large quantity of wood pulp used it settles very readily and no filters are required. The crude liquors are delivered at K, the flow

PLATE XIX.]

Burnley Paper Co.'s Precipitation Tanks.

Mr J. Cartwright, M. Inst. C. E., Bury, Engineer.

[*To face page* 218.

PLATE XX.]

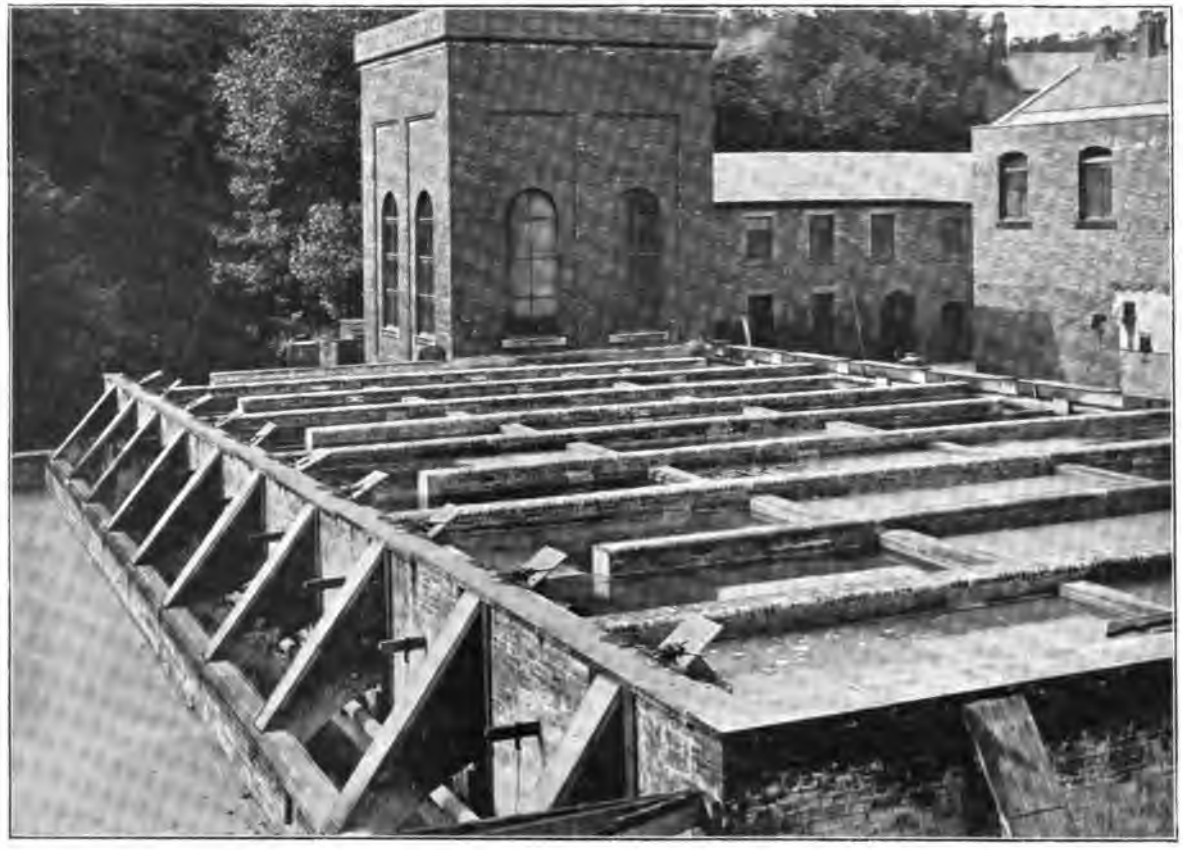

Precipitation Tanks, Sun Paper Mill, Feniscowles, near Blackburn.

[*To face page* 218.

DIAGRAM 24.

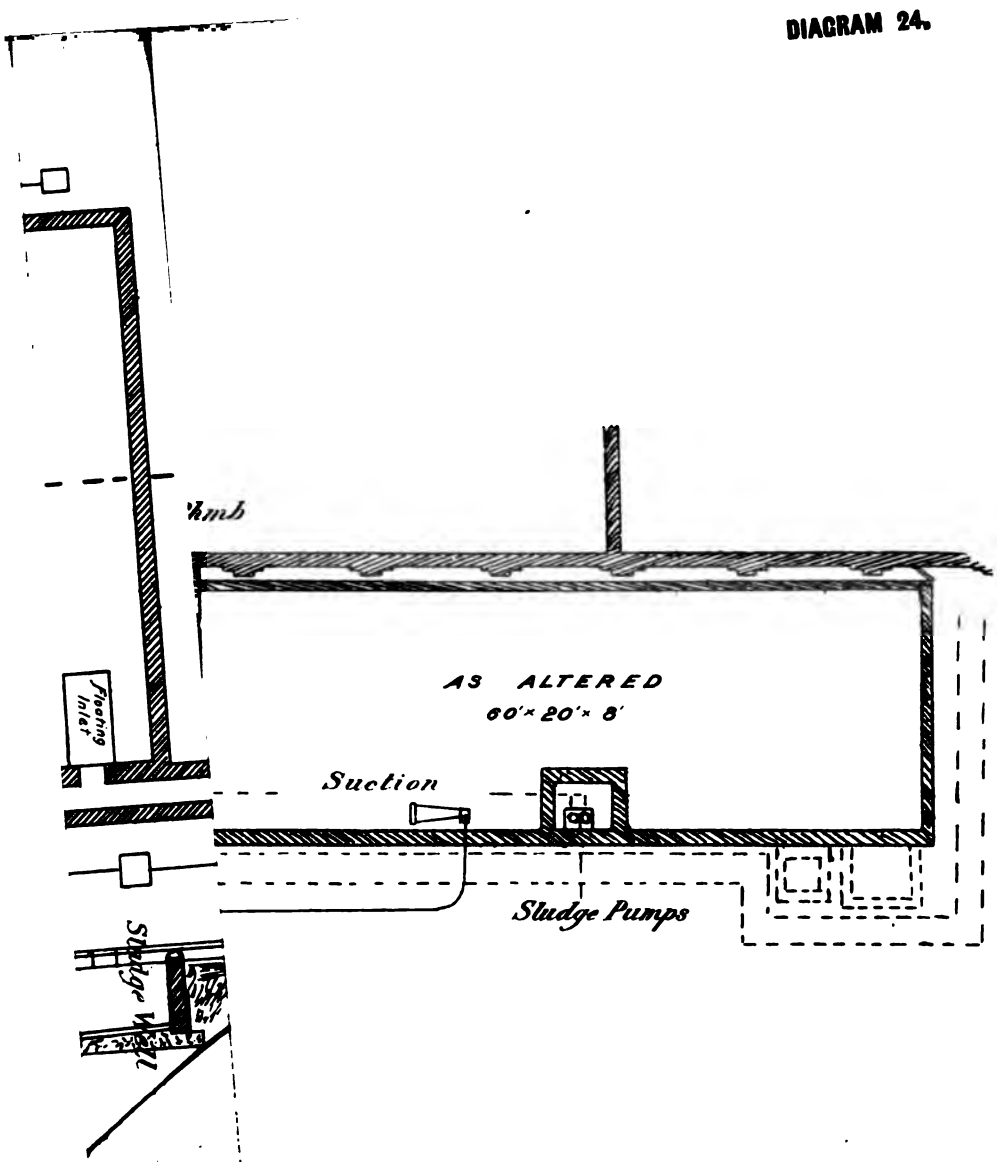

[*To face page* 218.

DIAGRAM 25.

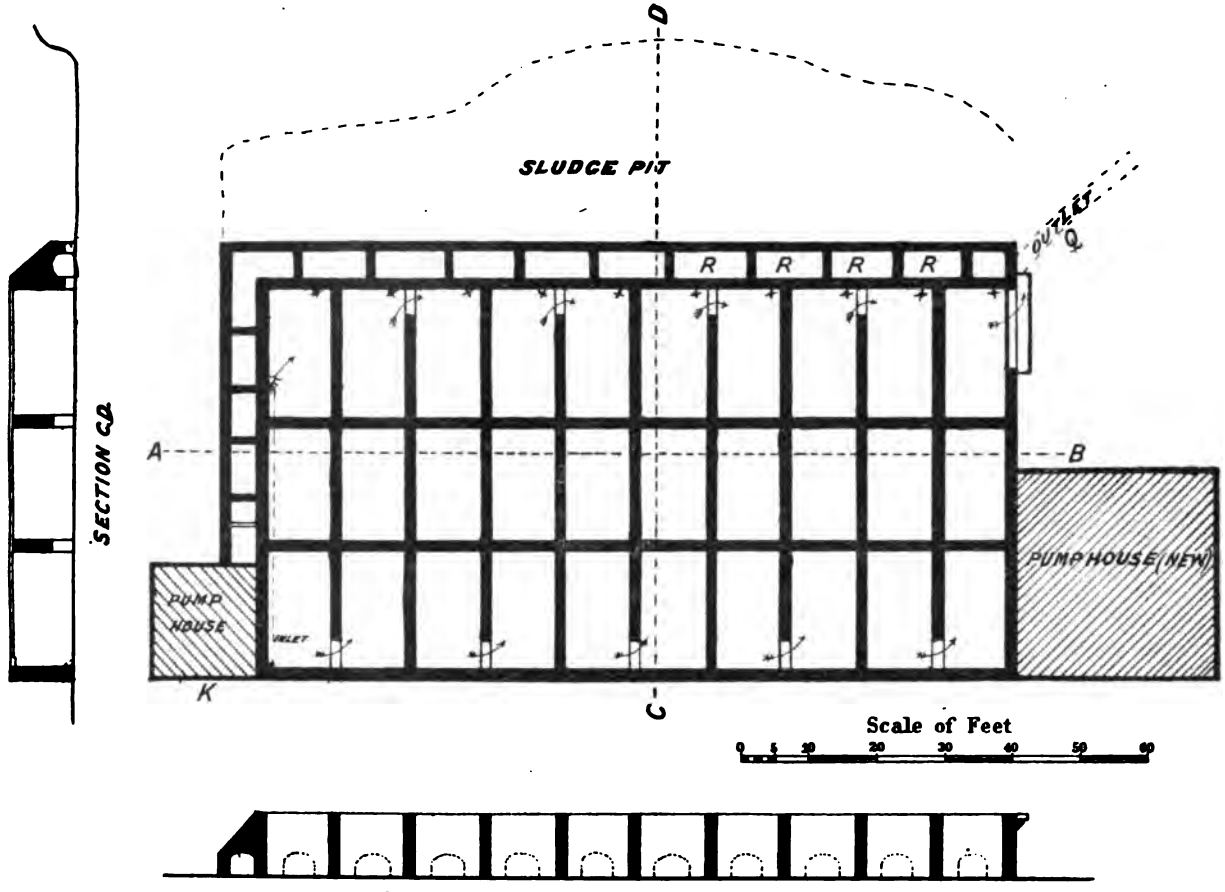

FIG. 101.—Sun Paper Mill Precipitation Tanks, Feniscowles, near Blackburn.

[*To face page* 218.

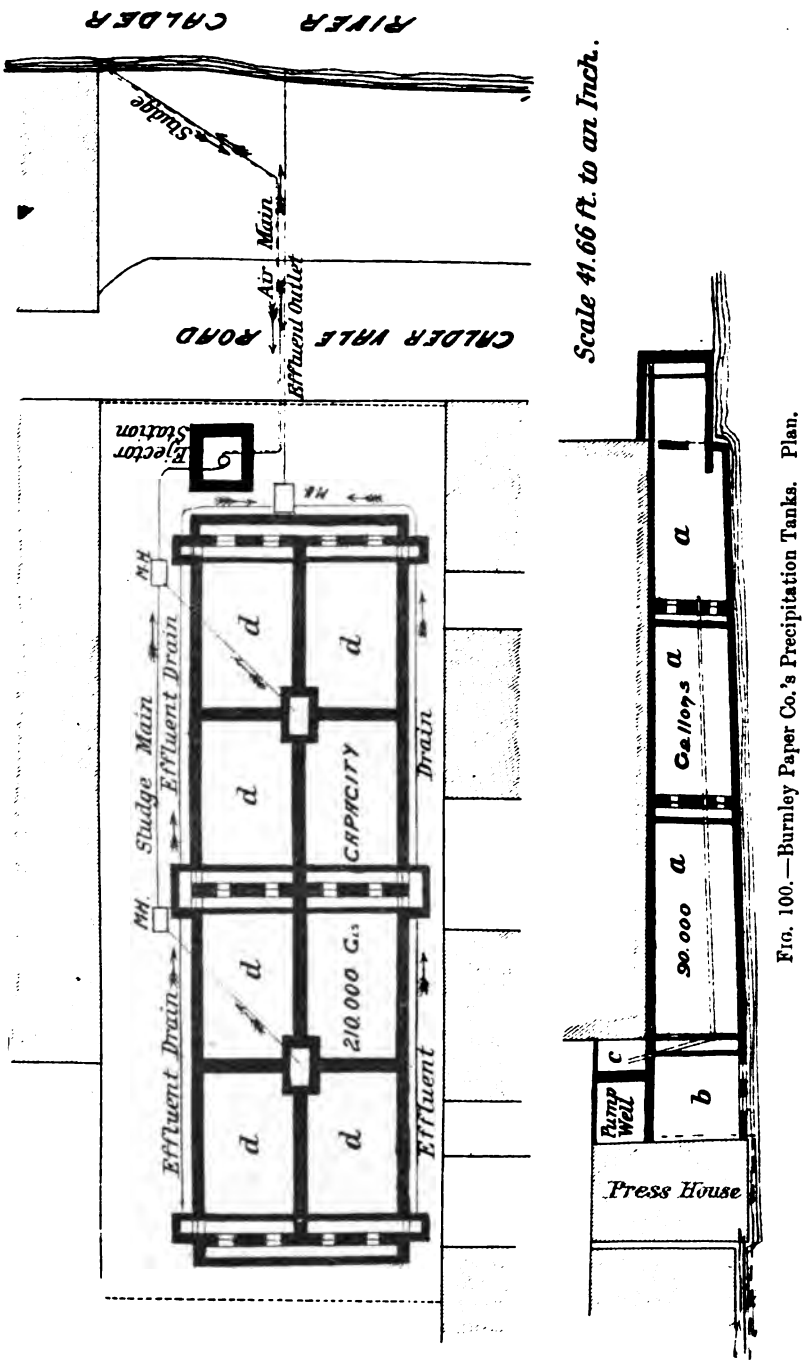

Fig. 100.—Burnley Paper Co.'s Precipitation Tanks. Plan.

being continuous as indicated by the arrows, the final effluent emerging at Q. No floating arms are provided, and for the abstraction of sludge the whole contents of one tank are withdrawn by means of one of the valves X and allowed to filter through cinder drainers in the chambers R. The sludge from the top of drainers is then discharged into sludge pit for further drying.

Darwen Paper Mill Co., Lower Darwen.—The settling tanks at this mill (fig. 102, diagram 26) may be cited as typical of the usual settling tanks and sludge drying arrangements for a brown mill. The liquors treated are about 100,000 gallons per diem. After drying, the sludge is mixed with the dust and 'fluff' from the dusting and picking of rags, together with a little cement, and disposed of as a composition for covering steam boilers. Although the final effluent, discharged warm, is fairly free from suspended solids, its gross content is such as to call for bacterial treatment at this point.

Messrs Peebles & Co., Ltd.—Figs. 103 and 104, diagram 27, show the tanks and filters at Messrs Peebles' Whiteash and Rishton Mills (Pl. XXI.). The plant, which explains itself as lettered, is hardly sufficient to deal with the very foul crude liquors which emanate from these mills. Much esparto grass is used, and as Porion evaporators only are in use at both mills the washing of half-stuff is not carried on to as great an extent as necessary, owing to the difficulty experienced with 'Porions' and weak soda liquors. The result is that the breaker wash waters render the whole waste liquors very slimy and so prevent the deposition of the fine suspended particles. Hence the filters in fig. 104, which, used as continuous flow mechanical interceptors, are always troublesome with paper mill waste.

The composition of Whiteash crude liquors may be judged from the following, taken haphazard:—

Nature of Sample.	Date.	Parts per 100,000.								
		Dissolved Solids.			Suspended Solids.			Gross Solids.		
		Mineral.	Volatile.	Total.	Mineral.	Volatile.	Total.	Mineral.	Volatile.	Total.
Breaker water and press pâte liquor,	Jan. 21, 1894	64	22	86	2	50	52	66	72	138
Breaker water and bleach liquor dregs,	Jan. 21, 1894	202	30	232	1292	174	1466	1494	204	1698
Culvert drainage, including supernatant liquor from machine water settling tank,	Jan. 21, 1894	130	22	152	16	22	38	146	44	190
Lodge water supply, .	Jan. 21, 1894	20	8	28	0	0	0	20	8	28
General effluent from outlet (culvert),	Feb. 8, 1894	212	96	308	50	56	106	262	152	414
General effluent from outlet (culvert),	Feb. 15, 1894	216	182	398	48	16	64	264	198	462

PLATE XXI.]

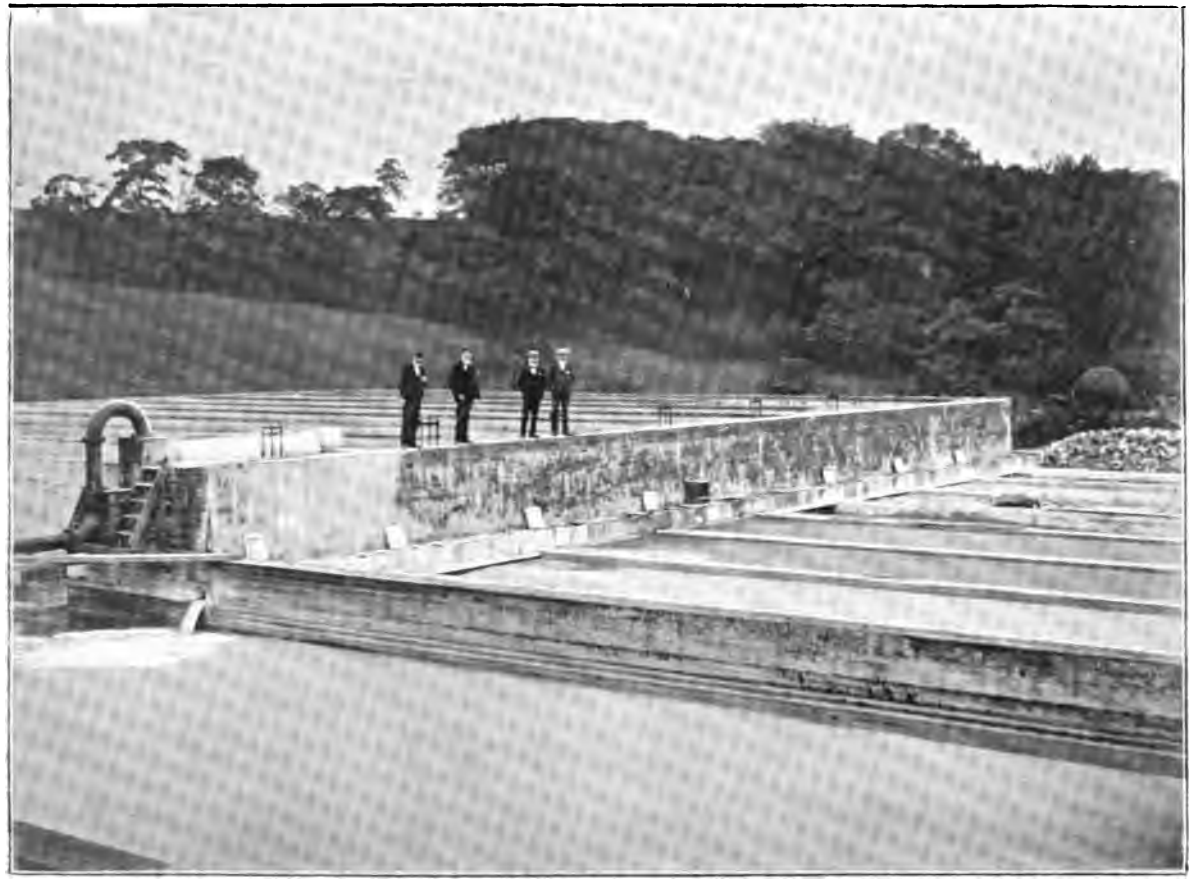

Precipitation Tanks and Sludge Drainers, Messrs Peebles & Co., Ltd., Reshton Paper Mill.

[*To face page* 220.

DIAGRAM 26.

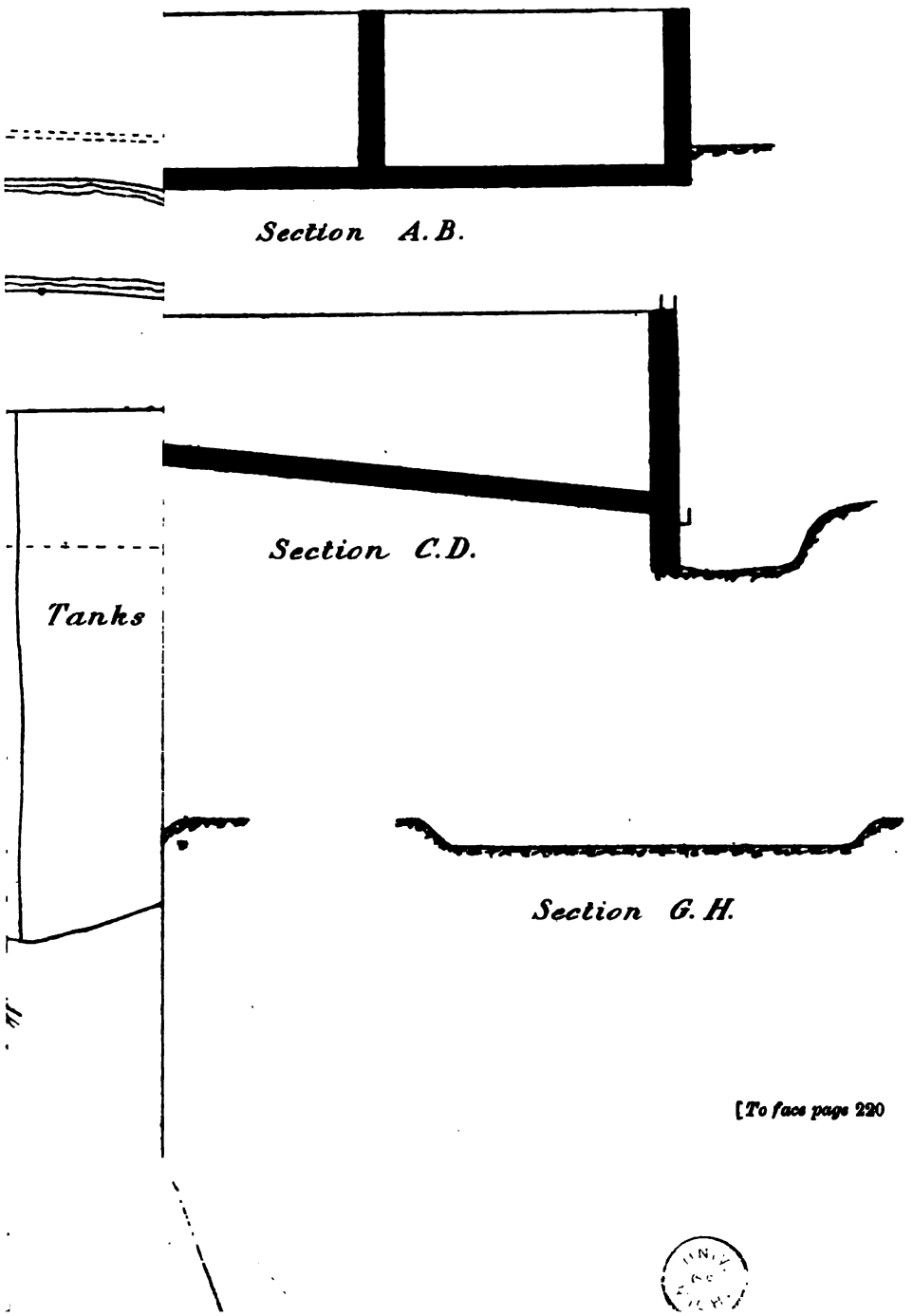

[To face page 220

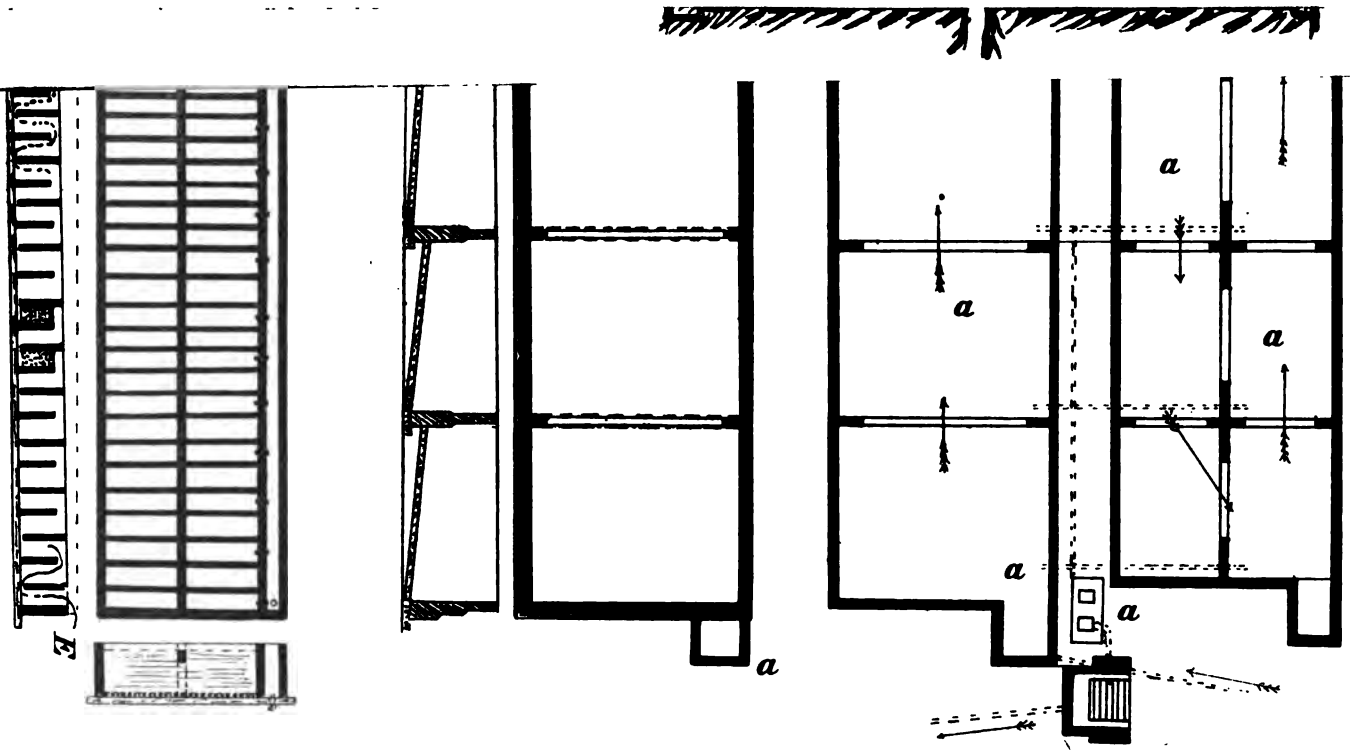

FIG. 104.—Precipitation Tanks and Filters, Whiteash Paper Mill, Accrington.

a Precipitation Tanks.
c Tank Effluent.
D Filter Inlet.
E Filter Outlet.

[*To face page* 230.

DIAGRAM 27.

It will be seen from these results that both the dissolved and suspended solids are very high, and they are fairly typical of the waste from a white mill other than news, where comparatively small quantities of wood pulp are used. Turned into a stream, even after exceptionally careful treatment by means of precipitation and filtration, they generally disfigure it both by froth due to alkalinity and by colouring matter. The burden of dissolved solids is such as to cause a sedimentation when aëration is affected, and the stones in the river bed are soon covered with a white deposit. Should any sewage or organic decomposable matter be present in the stream, the alkalinity assists putrefaction and the paper mill precipitate bears down with it a black slimy coat which renders the river 'dead.' The author remembers the jurymen in a legal action for pollution by a paper mill being very indignant because no specific 'poisons' could be instanced in the effluent complained of. If, however, the sickening picture of a stream bearing a mixture of sewage and paper mill waste is seen once, the observer will probably be satisfied that the presence of specific poisons need not be demonstrated to justify the call for some measure of pollution prevention.

The tendency to throw down a deposit or incrustation is greater with paper mill refuse than with most others. The boiling liquors are much stronger (lime and soda) than those of most textile industries, in addition to the disadvantage of their being turned out at a higher temperature. The high temperature is maintained also. As compared with textile factory liquors less colder 'wash' waters are added. Were such 'wash' waters added the dilution effected would prevent incrustations to some extent, although the circumstances under which the soluble burden is taken up in the boilers and rag engines, and the nature of the burden itself, are of such a character as would in almost any event result in considerable sedimentation. It is principally on this account that objections are raised to receiving paper waste in towns' sewers. Strenuous efforts were made recently both by Messrs Potter of Darwen and Messrs Peebles of Oswaldtwistle to compel the corporations of Darwen and Oswaldtwistle respectively to admit the waste into the sewers, but both actions failed.

In the former case Dr Burghardt examined the representative samples of crude waste from six mills in Darwen. (See Tables on next page.)

The incrustations formed are in composition just such as these analyses of soluble and insoluble content would suggest, consisting of sulphate and carbonate of lime with resinous coloured organic matter. The deposit falls from neutral solutions, and any attempt to prevent it with a view to its discharge into sewers by rendering the liquors acid in reaction would endanger the cement joints of the sewers, to say nothing of complicating matters in connection with treatment at the outfall works.

Pipes for conveying the waste to tanks for treatment or delivery pipes

Examination of Paper Mill Effluents.

Results expressed in parts per 100,000.

No. of Sample Crude Waste.	Total Solids.			Dissolved Solids.			Suspended Solids.			Dissolved Solids contain Corresponding to			
	Mineral.	Organic.	Total.	Mineral.	Organic.	Total.	Mineral.	Organic.	Total.	Lime.	Sulphuric Anhydride.	Calcium Sulphate.	Lime free and as Carbonate.
1	140·8	98·8	239·6	54·8	33·8	88·6	86	65	151	11·6	5·8	9·86	6·54
2	219·1	178·4	397·5	98	54·5	152·5	121	124	245	38	30	51	17
3	92·5	36·5	129	84·5	33·5	118	8	3	11	29·5	23	39·1	13·4
4	79	31·4	110·4	38·5	2·4	40·9	40·5	29	69·5	13	13	22·1	3·9
5	137·6	117·4	225	57·6	8·4	66	80	109	189	24	30·2	51·34	2·86
6	198·8	174·5	373·3	121·8	129·5	251·3	77	45	122	undet'd	4·5	7·65	undet'd

Examination of Paper Mill Effluents—(*continued*).

Results expressed in parts per 100,000.

No. of Sample Crude Waste.	Suspended Solids contain		Alkalinity $\frac{N}{10}$ H_2SO_4 required.	Albuminoid Ammonia.	Oxygen Absorbed.		Reaction with Litmus.	Remarks.
	Calcium Oxide.	Calcium Sulphate.			1 hour.	3 hours.		
1	52	...	10·5	1·05	12·32	18·64	Strongly alkaline.	Greyish brown, thick.
2	30	...	7·5	2·75	17	33·36	Slightly alkaline.	Dark brown, thick.
3	4	...	3·4	0·65	5·72	7·84	Strongly alkaline.	Clear yellow, buff sediment.
4	2	...	0·4	0·17	3·28	4·32	Neutral.	Settles quickly, colourless liquid.
5	7·2	6·9	1·8	0·8	15·6	18·4	Neutral.	Very thick and black.
6	undet'd	...	85	1·95	32·0	34·64	Strongly alkaline.	Chocolate brown, thick.

from pumps should be laid therefore with specially good margin of bore and abundance of manholes or eyeholes. Cases have occurred where 18-inch and 21-inch pipes have become completely choked by liquors only sufficient

in volume to run half bore. The cementing action is assisted by the size added in both white and brown mills, and in white mills by the extracts from straw and esparto. Dr H. Fleck (Dresden) reported on examining a lime boil from straw:—

"It had a specific gravity of 1·0240, was of a bright yellow colour, turbid, and could not be completely clarified even by repeated filtration. The permanent turbidity was caused in part by finely divided particles of silicate of lime. It contained 5466·4 parts per 100,000 dissolved solids, of which 1443·4 were mineral ingredients. The latter consisted principally of lime in conjunction with *lignose*. This combination was not broken up by acids; it separated out, however, from the fluid under the influence of pure alcohol, as a gall-like mass of a bright yellow colour."

When, in cases of raw liquors from rag, straw and esparto washing, all possible has been accomplished in the way of settlement, precipitation and sludge abstraction, a report might well be made as to bacterial treatment. The difficulty with regard to free chlorine having been overcome in the case of bleach-dyeworks, Chapter VI., Messrs Wiggins, Teape & Co., of Chorley Lancashire, decided in August 1900 to try the effect of bacterial treatment on a portion of the waste from this paper mill. The effluent as turned out from the existing plant had been fairly clear, having been settled, and filtered through continuous animal charcoal filters. Complaints, however, were made by riparian owners some distance down the river Lostock below the works, as at this point considerable decomposition took place, with the usual offensive emanations. By this time evidently the sterilising effects of the small quantity of free chlorine had been annulled. The most objectionable constituent of the crude liquors is the organic matter from the old rags used, and the starchy and fatty sizes from the new unbleached cloth or 'parings.' It was arranged first to try the bacterial filter with sprinklers on the ordinary tank effluent. Fairly satisfactory results were obtained by this, but as the effluent was always turbid, probably owing to the finely divided particles of china-clay, sewage was added, and the table, page 224, shows the results obtained for a period of about three months, including the time both before and after the addition of sewage. The installation was practically the same as those at Messrs Peel, Tootal, & Co.'s works, and the Hook Norton Brewery (figs. 81 and 75). The results were satisfactory, one of no little importance being the absence of the turbidity due to the coagulating effect of the sewage. In almost all mills where esparto grass is used, much difficulty is experienced in obtaining a clear effluent, even after filtration through very fine ashes, as instanced in the case of Messrs Peebles & Co., page 220. After admixture with sewage, however, and sprinkling, the final effluent contains much less suspended matter than that from brewery waste.

There are a few, though only a few, wood sulphite mills in this country,

RESULTS OBTAINED ON TREATING PAPER WORKS WASTE, AFTER SETTLEMENT, ON BACTERIAL FILTERS AT THE WORKS OF MESSRS WIGGINS, TEAPE & CO., LTD., CHORLEY.

Results in parts per 100,000.

Sample.	Date.	Albuminoid Ammonia.	Nitrates.	Dissolved Solids.			Suspended Solids.		
				Mineral.	Volatile.	Total.	Mineral.	Volatile.	Total.
Unfiltered liquor, .	September 4, 1900	·124	0	41	21	62	...	...	...
Filtrate, . . .	,, 4, ,,	·054	0	47	14	61	...	...	...
Unfiltered liquor, .	,, 11, ,,	·134	0	39	17	56	...	...	...
Filtrate, . . .	,, 11, ,,	·096	0	36	14	50	...	...	...
Unfiltered liquor, .	,, 13, ,,	·285	0	43	14	57	2·8	4·4	7·2
Filtrate, . . .	,, 13, ,,	·160	0	36	14	50	2·0	1·4	3·4
Unfiltered liquor, .	,, 17, ,,	·266	0	46	17	63	3·6	3·0	6·6
Filtrate, . . .	,, 17, ,,	·208	0	40	17	57	1·6	2·4	4·0
Results after addition of Sewage to Precipitation Tank.									
Unfiltered, . .	October 12, 1900	·180	0	..	...	...	2·7	5·4	8·1
Filtrate, . . .	,, 12, ,,	·072	1·1	...	...	...	·9	·3	1·2
Unfiltered, . .	,, 22, ,,	·276	0	...	...	...	3·5	5·6	9·1
Filtrate, . . .	,, 22, ,,	·127	1·3	...	...	...	·7	·7	1·4
Unfiltered, . .	,, 24, ,,	·270	0	...	...	...	4·3	7·2	11·5
Filtrate, . . .	,, 24, ,,	·127	1·2	...	...	...	·8	·5	1·3

and from these the waste liquors are peculiarly difficult to dispose of satisfactorily.

Instead of ordinary caustic alkali, a boiling liquor of bisulphite (or acid sulphite) of an alkaline earth—lime generally—is used, made by passing sulphurous acid gas from the burning of sulphur or pyrites through a solution of lime, or a tower of limestone fragments continually wetted.

The solution used generally has a strength of 6° to 9° Twaddell.

The wood to be treated is cut into small strips and digested at a pressure of 60 to 90 lbs. In this process it loses practically all but the fibrous cellulose, the resinous and gummy substances being dissolved, and charring or oxidation is prevented by the reducing action of the sulphurous acid. The actual loss in the wood is about from 60 to 70 per cent., 1440 lbs. of spruce yielding 410 lbs. of finished fibre. At the high temperatures reached some of the gums or resins are converted into tarry substances which render the waste liquors very offensive.

The liquor is further broken up into bodies having the characteristics of aldehydes, which in turn form soluble compounds with bisulphite of lime. These are further oxidised into organic acids, notwithstanding the presence of the reducing agent, sulphurous acid, and actually displace it from organic salts. Much free acid is also present in the waste. H. Frank * gives the following composition of sulphite waste :—

Parts per 100,000.

Total dry residue, . .	8000·0 to 8400·0
Calcium oxide, . . .	740·0
Sulphuric acid, . . .	1474·0
Chlorine, ...	7·0
Phosphoric acid, . . .	5·0
Silicic acid, . . .	15·0
Magnesia and alkalies, .	40·0
Organic matter, etc., . .	5300·0 to 6000·0

The method of purification he adopted was to precipitate first (or rather neutralise) with free lime, and then to blow chimney gases through in order to carbonate any excess of free lime, and to oxidise any sulphite of lime. By such treatment a dense precipitate of sulphate and carbonate of lime falls, together with a considerable quantity of organic matter. The top liquor is clear and said to be fit to discharge into streams. This, however, is doubtful. Much objectionable soluble organic matter remains behind, *i.e.*, products of decomposition or of inversion under pressure—mannose, galactose and pentaglucoses.

E. Bruck † states that if these effluents are treated, when acid or

* *W. Jahresbericht*, 1887, page 1177.

† *Chem. Zeitung*, 1892, p. 1782.

neutral, with leather glue, a compound of tannic acid and glue is formed which coagulates on storing and becomes highly viscid. If, then, the colourless and clear top liquor be decomposed with sulphate of alumina another gummy precipitate is formed. Both precipitates are soluble in alkalies or weak ammonia, and may be obtained, dried, and powdered. If then the clear liquor be neutralised with chalk or lime, a precipitate, and clarification, ensues, and the top liquor is free from smell and has lost about 25 per cent. to 30 per cent. of the total organic constituents—and those the most easily decomposable.

Dr W. Buddeus* is quoted by Messrs Griffin and Little in *The Chemistry of Paper-making* as follows, concerning the laboratory treatment of sulphite liquors:—

"The waste liquor was neutralised by ammonia, the lime was precipitated by ammonium carbonate, and the carbonate of lime thus formed was separated by filtration. The dark brown filtrate was evaporated, and the dried residue distilled. The residue contained 7·2 per cent. ammonia as salts. Water and a yellow coloured oil were obtained in the condenser, and finally a crystalline sublimate appeared on the walls of the tube. The gases escaping were caught in the gasometer. The oil, at first, had an odour like mercaptan, but this disappeared on heating slightly. This odour was, without doubt, due to organic sulphur compounds which were present in traces. The oil and water were, after this heating, distilled with steam. The distillate was shaken out with ether, then dried, and the ether evaporated over calcium chloride. A brown oil remained, which boiled at 130° C., and which coloured a fine chip, moistened with hydrochloric acid, a strong carmine, and which was therefore believed to be pyrrol. Pyro-catechin was also obtained in the distillate, as was proved by colour-tests with iron salts, and its reduction of Fehling's solution.

"The gases were carbon monoxide, hydrogen, marsh gas, and sulphuretted hydrogen. 400 grammes of the residue yielded 180 grammes of coke, 30 litres of gas, and 200 grammes of distillate.

"Mucic and saccharic acid could not have been present as such in the liquor, because they are formed by the oxidation of carbohydrates, and the action of the liquor is a reducing one. Pyrrol is formed by the distillation of ammonium salts of these two acids. The only way of accounting for the pyrrol is the presence of succinic acid, which is very probably present, owing to the occurrence of resins in wood. Ammonium succinate changes readily by splitting off of water into ammonia succinamide, which by heating with reducing agents gives pyrrol.

"The presence of pyro-catechin is due to that of dioxybenzoic acid (1, 3, 4), which is in the liquor as dipyrocatechuic acid. The decomposition of this by distillation with ammonia is a source of tannic acid and

* *Papier Zeitung*, March 1891.

pyro-catechin. There is, according to Dr Buddeus, no tannic acid present in the liquor, which will give a blue-black colour with ferric chloride, because the tannin in wood is reduced by digesting with sulphurous acid.

"The reduction is probably due to dipyrocatechuic acid, but by treating with ammonia and distilling, tannic acid is eventually formed. Sulphites are oxidised to sulphates when the tannin is reduced. It may be, therefore, that the difficulty of pulping wood rich in tannin by the sulphite process is due to the action of the tannin, which renders the sulphurous acid ineffective."

F. B. Ahrens, E. Klingenstein, and P. Schubert * state that many German wood pulp mills have been compelled to close because it was found impossible to comply with the requirements of rivers pollution officials. Concerning the examination of a sample of waste sulphite liquors they state it was of a strongly acid reaction, specific gravity 1·0465, and optically inactive. The dry residue was 9·4 per cent., whereof 1·11 per cent. was ash and 8·29 per cent. organic matter—not strictly accurate determinations.

The liquors were, on coming from the digesters, nearly neutralised with lime and afterwards completely neutralised by passing over limestone. The hot lye was mixed with a known quantity of fresh lime water once boiled, filtered, and the filtrate neutralised with carbonic acid gas as mentioned before.

The following results were obtained:—

No.	CaO per cent.	Dry Substance per cent.	Ash per cent.	Organic Matter per cent.
1	2	8·75	1·80	6·95
2	3	7·48	1·59	5·89
3	4	7·36	1·71	5·65
4	5	7·13	1·56	5·57
5	6	6·86	1·52	5·34
6	7	6·74	1·58	5·16
7	8	6·65	1·54	5·11
8	9	6·61	1·57	5·04
9	10	6·79	1·51	5·28†
10	11	6·54	1·55	4·99
11	12	6·52	1·49	5·03†
12	15	6·31	1·49	4·82
13	20	7·00	1·60	5·40†
14	30	4·99	1·01	3·98

The liquors were then taken cold and the following results obtained:—

* *Zeitschr. f. angew. Chemie*, 1895, page 41.

† Organic matter rendered soluble again by boiling.

No.	CaO per cent.	Dry Substance per cent.	Ash per cent.	Organic Substance per cent.
1	2	6·21	1·11	5·10
2	3	6·19	1·33	4·96
3	4	5·26	1·00	4·26
4	6	5·08	1·04	4·04
5	8	4·96	1·10	3·86
6	10	5·67	1·22	4·45
7	12	5·76	1·23	4·53
8	14	6·26	1·29	4·97

Aluminate of soda was then tried as a precipitant, but the results were less satisfactory, and no special osmotic action was discovered on investigation.

The precipitated and neutralised liquors were then treated electrically. A current of 5 ampères and only sufficient potential was passed through the liquid from platinum electrodes, but no diminution in either mineral or organic matter was observed after 120 minutes. A high tension current was then tried, 106 volts, but the results were equally ineffective after a trial of the same duration.

It is evident, therefore, that the objectionable organic matters, if recoverable at all, call for some process hitherto undiscovered.

The author tried, unsuccessfully, treating this waste bacterially after neutralisation on the lines of his patent. It was found absolutely sterile to begin with, and the amount of bacterial filtration required for its decomposition was altogether impracticable.

A. G. Brookes (Patent Specification 8088, 1901) suggests the following treatment:—

Evaporation until only 20 per cent. of water is present.

The sulphur compounds are then said to be decomposed, yielding sulphurous acid and volatile compounds of sulphur, which are recovered.

Organic substances such as carbohydrates and albuminoids are then added to prevent the formation of a skin, and the dry residue is used as a fuel, pitch, glue, resin, or size.

CHAPTER IX.

GENERAL CHEMICAL TRADES.

Distillation of Ammoniacal Liquors.

THE gas liquor fresh from the works 'scrubbers' contains :—

Ammonium sulphide,	Ammonium sulphate,
,, carbonate,	,, thiosulphate,
,, chloride,	,, ferrocyanide,
,, sulphocyanide,	

in addition to the constituents of the water supplied for scrubbing purposes and variable tarry or oily substances. On adding a considerable quantity of lime to the liquor, and heating, the ammonia is displaced by it, and the acids of the above salts are left combined with the lime base.

As the residual liquor leaves the stills it is generally a thick brown liquid, supersaturated, at atmospheric temperatures, with lime or lime salts, covered with an oily film, and containing much lime in suspension.

Its objectionable constituents are the tarry matters, ferrocyanides, sulphides, suspended lime, and the free lime in solution.

A sample after settlement and filtration through sand filters contained the following :—

Total solids (dissolved),		1294 parts per 100,000
Mineral residue,		874 ,,
Volatile ,,		420 ,,
Sulphur as sulphides,	32·8	,,
Sulphur as sulphates,	16·2	,,
Sulphur as sulphites and hyposulphites,	18·5	,,
Total sulphur,		67·0 ,,
Lime (as CaO),		359 ,,
Total chlorine,		232 ,,
Chlorides of sodium and potassium,		146 ,,

Ferrocyanides, ferricyanides, and sulphocyanides were also present.

It is evident, therefore, that simple settlement and filtration is insufficient.

The first important step is, of course, the settlement of the suspended lime, and this is easily accomplished by means of ordinary precipitation tanks.

The free lime might also be neutralised and eliminated in the same tanks by means of precipitants such as copperas, aluminium sulphate, etc., but the quantity of lime present is so great that the copperas required for neutralisation is enormous and the sludge in proportion.

Dr Lunge, in his "Coal Tar and Ammonia," * describes the purification plant in use at the workmen's colonies in connection with Messrs Krupps' works, Essen, from particulars supplied by Dr Solomon, the chemist there.

The clarifying plant is shown in fig. 105.

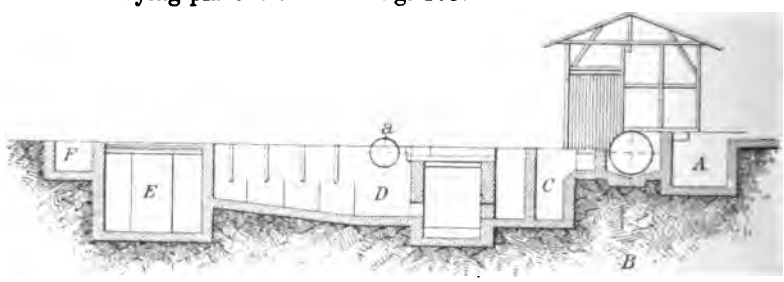

Sectional Elevation.

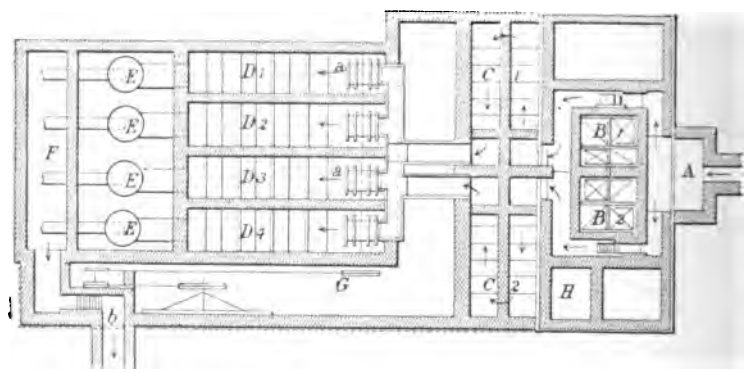

Plan.

FIG. 105.

"The liquid first runs into the catchpool A, where the heavier substances suspended in the water and those floating on the top are retained. From there it flows into one or other of the feeding-vessels, B B; two of these are provided, so that one may be always in operation. They contain a small over-shot waterwheel, the prolonged axle of which carries on either side a cross with baling-buckets and a stirrer for each of the tanks, separately holding milk of lime and solution of copperas. This water-wheel is turned by the inflowing waste liquor itself, and will, of course, turn more or less

* "Coal Tar and Ammonia," by George Lunge, Ph.D., Professor of Technical Chemistry in the Federal Polytechnicum, Zurich. London: Gurney & Jackson.

quickly according to the supply of such liquor; hence the baling buckets, fixed at the sides of the wheels, will take up more or less of the chemicals, exactly in accordance with the quantity of liquor to be purified. Thus the supply of chemicals is self-regulating, and only requires the filling up of the reservoirs from time to time with milk of lime and solution of copperas. The number and size of the baling-buckets must be determined once for all by practical trials, as well as the concentration of the chemicals. The milk of lime taken up by the buckets fixed to one side of the wheel is discharged into the waste liquor just below the wheel; but the copperas solution taken up by the buckets on the other side of the wheel is conveyed in a special conduit into the reservoirs D D. The liquor, mixed with a sufficient quantity of lime, flows by a channel into one or other of the tanks C C (there are two of these, so that one can be cleaned out without interrupting the work of the other). It runs on in the direction of the arrows, and the zigzag partitions arranged in the tanks cause a large portion of the suspended matters, along with those precipitated by the lime, to settle down. The liquor, still saturated with lime, is run by means of a spreading-shoot into one of the four separate tanks, D1, D2, D3, D4, where it meets with the copperas solution coming from B1 or B2. This causes a thick, flocculent, dark green precipitate to be formed, consisting of ferrous hydrate and calcium sulphate, which quickly settles down as the liquor travels on, and carries down all the finely divided matter still in suspension. (I have proved by experiment that nearly all the tarry matters found in waste ammonia liquors are carried down here, and the liquor issues nearly, or even quite, devoid of colour and smell.) The flow is here also broken by zigzag partitions and checks; but in order to better retain the flocculent precipitate there are also peat filters placed in the way of the liquor, in lieu of ordinary checks. A small agitator, *a*, causes an intimate mixture of the liquor and of the copperas solution. The necessary moving power may be either derived directly from the wheels in B B, or else from a separate wheel driven by the clarified water; but the latter is only possible where there is a sufficient head of water at disposal.

"Since, in order to completely retain all the flocculent precipitate, the tanks D D would have to be made of an inconvenient length, another arrangement is provided for that purpose. This is the set of catchpools E E E E, from which the completely clarified liquor runs away through F.

"In some cases (especially with sewage) it will be necessary to restore to the outflowing liquid the oxygen taken away from it by the ferrous hydroxide. If the outflowing liquor is used for driving a water-wheel, as shown in fig. 77 at *b*, there will be sufficient contact with atmospheric oxygen as the liquor is running over the wheel. In other cases such contact can be caused by special means (probably unnecessary in our case).

"The mud collecting in the tanks C C and D D is from time to time

removed by taking out the checks and opening the discharge-valves. It then flows, with sufficient fall, into the mud-tank G, and is pumped up from here by a dredger or other suitable means, in order to drain in special filtering-basins. It is possible to keep the lime precipitated in C and the iron precipitated in D separate, and to utilise the former for agricultural purposes.

"The milk of lime and the copperas solution ought not to be made with foul liquor, but with clear water. For this purpose that coming from F may be conveyed into the tank H, and can be pumped up from here as it is required.

"The plant shown here serves for daily purifying from 2000 to 3000 cubic metres (say, tons) of concentrated sewage; it costs about £750, inclusive of mud-filters, and requires only one man for superintendence, as everything is self-regulating."

The effluent from this treatment, however, is found to contain much organic matter as well as much mineral matter in solution; in fact, it is rarely less than 1000 parts per 100,000.

Practically the same treatment was in vogue at Messrs Metcalf & Co., Ltd., Church, for some years the tanks being supplemented by sand filters (fig. 106).

The best method of treatment yet seen by the author is:—

1. The injection into the liquors of, and thorough agitation by, chimney gases. The carbonic acid dissipates any sulphides present and throws down some portion of the lime which forms a fine precipitate and enmeshes a considerable amount of matter 'frothed' out of solution. The vigorous agitation of saturated solutions nearly always results in a solid scum, especially if they be alkaline.
2. Subsidence.
3. The conduction of the clarified liquors to precipitation tanks and treatment with basic alumina ferric and a little ferric iron solution. A dense precipitate of aluminium hydrate and lime sulphate is formed, accompanied by much organic matter.
4. Aëration on the Mather & Platt system (see page 25), followed by subsidence.

The top liquor after this treatment is clear, colourless, neutral, and has a greatly reduced soluble content, that remaining being principally salts of lime and soda—though probably the bulk of the sulphocyanides are present also, and these are always considerable.

A much more complete and scientific method is that of H. W. Crowther, Patent 11,964, 1893. The gas liquor is treated with lime kiln or other gases containing carbonic acid, the precipitated calcium carbonate is allowed to subside, and the cleared separated liquid is agitated with nearly sufficient

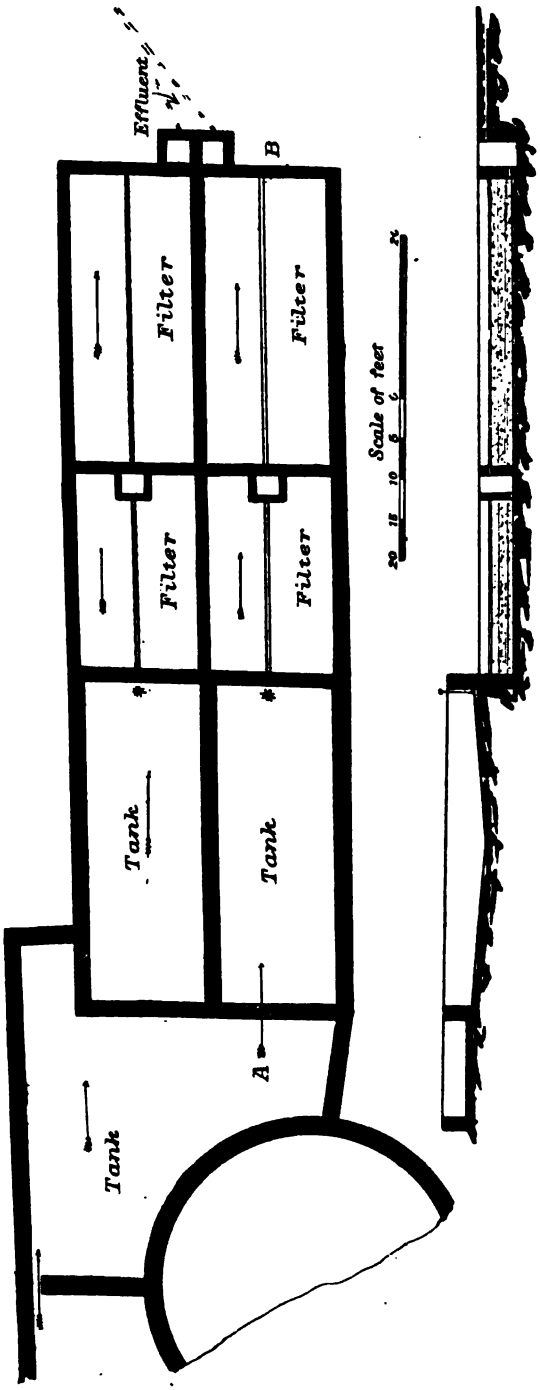

FIG. 106.—Tanks and Filters for Ammonia Still Liquors, Messrs Metcalf & Co. Ltd., Church.

precipitated cuprous oxide (mixed to a creamy consistence) to form a cuprous salt with the sulphocyanide present. The mixture is then slightly acidulated, preferably with hydrochloric acid.

After agitation, subsidence, and the removal of the supernatant liquor, the cuprous sulphocyanide is collected on a filter, washed, and used to obtain any desired sulphocyanide of an alkali, or alkaline earth, by treating it with such in the state of carbonate, oxide or hydroxide, the latter preferably in the case of an alkali being used. The cuprous oxide reproduced is available for another operation.

The very expensive reagent cuprous oxide requires such careful precipitation and filtration to prevent loss, that in few cases only has the value of the sulphocyanide recovered justified the expense of recovery apart from pressure applied by Rivers Pollution Authorities. A quicker method of precipitation is to use ferrous and also cupric sulphates and afterwards to neutralise with lime—though the sulphuric acid in this case is practically wasted, for the total burden of the liquor is really only decreased by the sulphocyanides, after preliminary treatment with basic sulphate of alumina. The following results were obtained on a total twelve hours settlement being allowed :—

Precipitation of sulphocyanides in ammonia still liquors containing in trial I. 65 parts per 100,000 CNS, in trial II. 47 parts.

Iron sulphate (ferrous) and cupric sulphate were added in equivalent proportion for precipitating sulphocyanides in accordance with previous estimation made. Liquid gently steam-warmed, precipitate allowed to settle, top liquor run off, and neutralised.

		Mineral.	Volatile.	Total.
Trial I.	Original liquor, ...	570	314	884
	Final liquor, ...	579	301	880
Trial II.	Original liquor, ...	1620	1060	2680
	After chimney gases, ...	1440	800	2240
	After ferrous and cupric sulphates, .	1546	712	2258

Ferricyanides and ferrocyanides absent, and sulphocyanides recovered.

The Manufacture of Soap.

As stated in Chapter III., the formation of a soap depends ordinarily on the decomposition of a glyceride by a stronger base than glycerin, the latter being liberated. In the case of caustic potash on glycerin tristearate the reaction is as represented in Chapter III., page 73.

Instead of stearine, other fats may, of course, be used, such as olive oil, castor oil, palm oil, cocoa nut oil, whale oil, tallow, seal oil, etc.; and oleic acid (see wool fat recovery, Chapter III.) may be saponified by means of carbonate of soda.

After saponification of the fats has taken place, common salt is added to

throw the soap out of solution; hence the water which is first used as a solvent for the soda then contains (1) glycerine, (2) common salt, (3) any adventitious dirt, and (4) any excess of soda. This mixture (the lye) is drawn off, as well as a second—after the 'rosin boil.' Other lyes are used subsequently for 'first' and 'rosin' boils.

The first two lyes, then, apart from solids such as carbonated lime from the causticising of soda ash, form the only waste to be dealt with at a soap works. These formerly were allowed to run to waste, but now in nearly all cases the glycerin is recovered.

The principle of recovery is the evaporation of all water from the lye, during which the salts are fished out, and the rectification of the residual glycerin.

According to Kingzett an average lye has the following composition after concentration to a density of 72° Twaddell:—

	Lbs. per gallon.
Water, ...	7·53
Glycerin, . . .	2·04
Salts, ...	2·78

Direct from the soap pans the lye is conveyed to settling tanks on the continuous flow principle, the connection between them being a siphon or dip instead of a sill, to prevent the passage of fat particles or suspended soapy or resinous matters, which are skimmed off from time to time and returned to the soap pan. The final liquor is generally acidified with hydrochloric acid and allowed to stand. Other resin and fatty acids rise to the surface, and after these are skimmed off concentration ensues, preferably in a vacuum evaporator, after the liquor has been rendered slightly alkaline.

The salt added to the lye as well as that due to the neutralisation of soda by hydrochloric acid is fished out.

The composition of the salt is given by Kingzett where neutralisation by acid had not been effected as—

Sodium chloride, ...	78·12 per cent.
Sodium sulphate, ...	8·61 ,,
Insoluble organic matter, ...	·22 ,,
Glycerin and soluble organic matter, . .	3·55 ,,
Water, ...	7·50 ,,
Alkali (calculated as sodium carbonate), .	2·61 ,,
	100·61

A useful form of evaporator for lyes thus treated is that of Messrs Geo. Scott & Son, illustrated in fig. 107.

It consists of receiving tank F^1 for lye, where acid is added, a pump which delivers into filter press E, the filtrate from which is received in tank F^2 and neutralised, then filtered again and delivered into tank F^3. From this tank the liquors are drawn into the vacuum pan D, the flow being

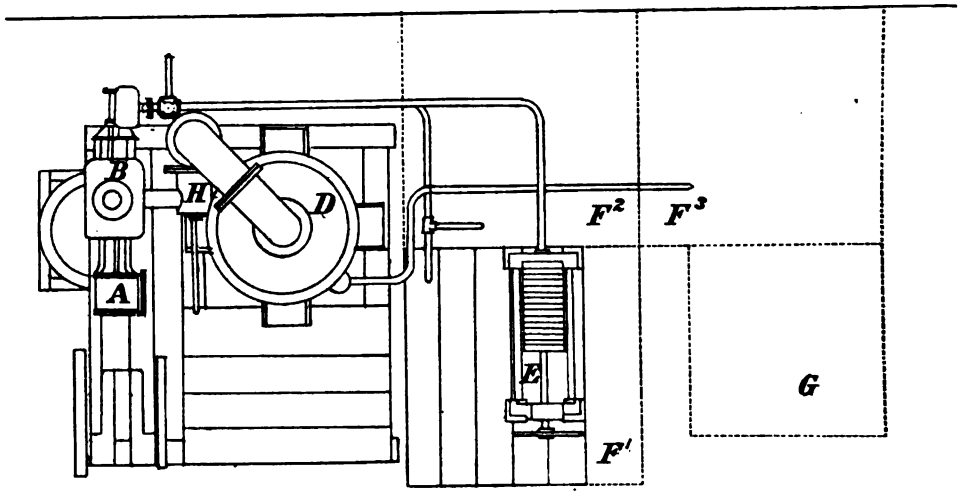

Plan.

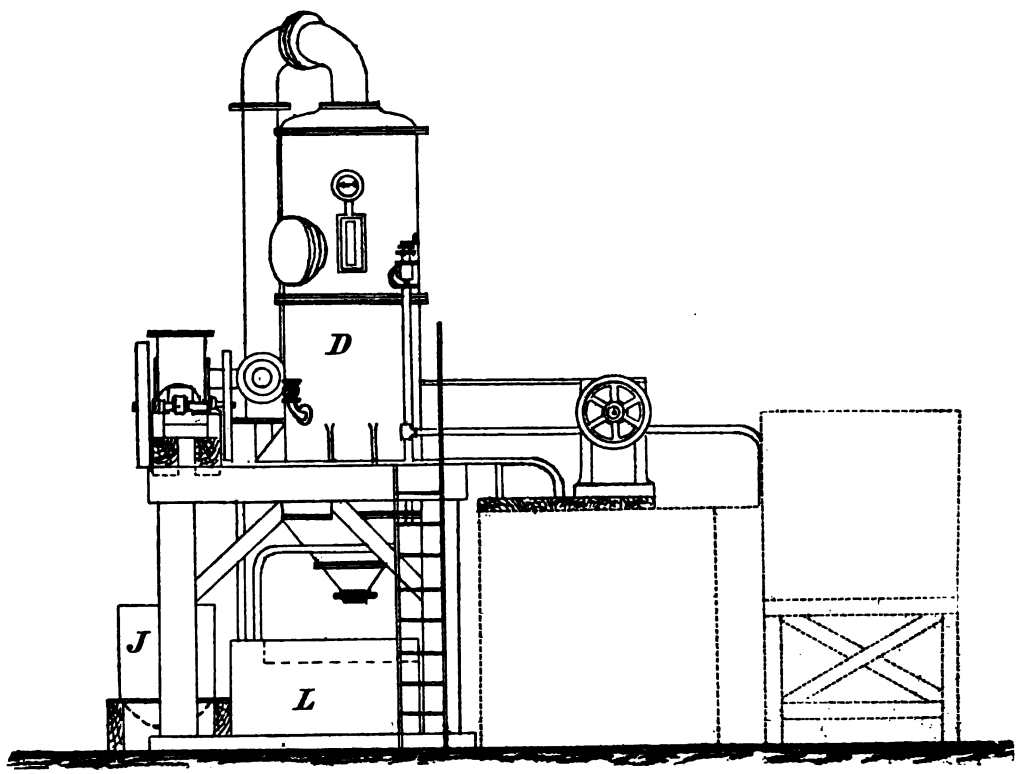

Elevation.

FIG. 107.—Scott's Glycerine (Vacuum) Evaporator.

regulated by a valve only, according to the rapidity of evaporation. B is the vacuum pump, which delivers the vapour from pan D into jet condenser H, which it also drives. J is a salt washer and L salt drainer. When the evaporation is complete the residual glycerin is either distilled off by steam coils, separated by a solvent such as carbon bisulphide, or exosmosed by means of parchment. The wash waters after bisulphite treatment, as also the final residuum after the distillation of glycerin, are small in volume and therefore easily disposed of.

Alkali Works.

The most recent method of producing alkalies, and probably the method of the future, is that of decomposing by electrolysis a solution of brine. Works are in operation both in the United States, Great Britain, and on the Continent, producing considerable quantities of both 'alkali' and 'bleach,' from which works there is no waste product of any description. But the process which is succeeding more notably so far as 'dividend' is concerned, is the Solvay Ammonia Soda process.

This is a process of injecting ammonia gas into a saturated solution of brine, together with carbonic acid gas. Ammonium chloride (in solution) and sodium bicarbonate as a precipitate are the resulting products, the latter of which is separated and roasted to the carbonate.

The ammonia is distilled from the chloride solution after the addition of lime, and the residual still liquors and solids form the only waste. This, it is almost needless to say, is considerable in volume, and consists of chloride of lime almost entirely, $CaCl_2$, its variation being only due to the nature of the common salt solution or brine. The decomposition of this into its constituents calcium and chlorine has called forth some heroic efforts, notably on the part of Dr Ludwig Mond, of Messrs Brunner, Mond & Co., but up to the present nothing of a very startling character commercially has been achieved in connection with its decomposition, and from the price at which the thousands of tons of spoil heaps can be obtained, it is evident that there is room for some method of easily and cheaply recovering the chlorine from this waste product.

Up to now it has just been run on to ground which has been underdrained, and as it has become harder by evaporation or percolation of the entrapped liquor, banks have been formed from the central portion, the space filled with fresh wet slime, and this process repeated *ad infinitum*. Now and again the banks slip into a neighbouring stream, as in the case of certain works in Cheshire; and after the Local Authority, a rural one, has been induced to suspend action by threats of the works being closed and of the consequent loss of property directly and indirectly assessable, the business goes on as merrily as before.

But the bulk of alkali works pollution arises from the Leblanc process

waste, and the bulk of this again from waste tipped in years gone by. In this process the salt cake (sulphate of soda from the decomposition of common salt by sulphuric acid) is roasted with powdered coal and carbonate of lime. The composition of the resultant black ash may be seen from three typical analyses given by Kingzett (The Alkali Trade).

Constituents.	A.	B.	C.
Sodium carbonate,	28·144	31·807	28·336
,, oxide,	5·860	5·614	3·844
,, chloride,	2·808	2·574	3·101
,, sulphate,	0·192	0·191	3·037
,, sulphite,	0·151	0·072	none
,, hyposulphite,	0·189	0·853	0·126
,, sulphide,	0·358	0·163	6·645
,, aluminate,	0·344	0·752	0·923
,, silicate,	1·026	0·914	0·758
,, cyanide,	0·186	0·043	0·422
,, sulphocyanide,	0·074	0·021	0·077
Calcium sulphide,	29·504	29·744	33·245
,, carbonate,	12·657	9·272	6·087
,, oxide,	10·048	9·488	3·465
Iron sulphide,	0·554	0·774	1·355
Alumina,	0·172	1·042	0·624
Silica,	1·095	0·923	0·973
Magnesia,	0·266	0·322	0·146
Soda,	0·344	0·546	0·577
Carbon,	4·263	4·483	4·958
Sand,	1·237	0·875	0·842
	99·472	99·479	99·646
Soluble iron sulphide,	...	...	·105

The contents soluble in water at about 120° F. are extracted by lixiviation. The contents of such lixiviation water are shown in the following analyses of Mr G. E. Davies, the results being given in grammes per litre :—

Analysis of Vat Liquor.	50° Tw. at 90° Fahr.	50°·5 Tw. at 90° Fahr.
Iron sulphide,	0·074	0·042
Sodium sulphide,	4·485	3·822
,, sulphite,	1·323	0·979
,, hyposulphite,	1·580	1·774
,, sulphate,	12·707	14·258
,, chloride,	19·597	23·412
,, silicate,	5·961	3·774
,, aluminate,	3·371	4·218
,, ferrocyanide,	0·133	0·416
,, sulphocyanide,	0·211	0·196
,, phosphate, ,, fluoride,	traces	traces
,, carbonate,	209·500	204·326
,, hydrate,	44·800	52·740

These liquors, therefore, leave behind practically all the calcium compounds, the alumina, silica, magnesia, carbon, and some little soda.

The most objectionable, perhaps the only reasonably objectionable, constituent, is the calcium sulphide. In the immediate neighbourhood of Widnes, St Helens, Accrington, and Liverpool, and indeed anywhere within reasonable distance where tipping spaces for it could be procured, there are thousands upon thousands of tons of this alkali waste.

Messrs Muspratt & Dawson give the following as its composition, fresh from the vats, and six weeks old :—

Constituents.	Fresh Waste.	Six weeks old.
$CaCO_3$,	41·20	23·42
$MgSiO_3$,	3·63	1·78
Phos. al (Fe_2O_3),	8·91	7·40
$CaSO_4$,	2·53	4·59
CaH_2O_2,	8·72	12·03
CaS_2,	5·97	0·62
CaS,	25·79	36·70
Na_2S,	1·44	2·87
Water,	1·73	10·59

	A.	B.	C.
Calcium carbonate,	84·79	87·16	86·32
,, sulphate,	·36	·49	·36
,, chloride,	...	...	...
,, silicate,	1·91	2·30	2·35
Magnesium carbonate,	1·34	1·03	1·07
,, oxide,	...	...	...
,, chloride,	...	...	...
Sodium carbonate,	·45	·55	·63
,, sulphate,	·07	·21	·07
,, silicate,	1·47	1·42	1·00
Soda,	...	...	...
Alumina,	1·19	1·47	1·35
Ferrous sulphide,	1·05	·71	·99
Ferric oxide,	...	...	...
Coke,	4·06	2·06	2·98
Sand,	·97	·56	·85
Silica,	...	...	...
Sulphur (free),	·45	·54	·40
Moisture (at 212° F.),	·58	·39	·34
Water,	...	...	...
Combined water and loss,	1·31	1·11	1·29
	100·00	100·00	100·00
Silica (combined) per cent.,	1·71	1·89	1·72
Sulphuric acid (SO),	·25	·41	·25
Sulphur as sulphide,	·38	·26	·36
Sulphur (free),	·45	·54	·40
Soda (soluble),	·26	·32	·37
Soda (insoluble),	·75	·72	·51

The story of the successful recovery of the sulphur from the waste, which is now in operation at practically all works using the Leblanc process, would require volumes. But after the cessation of the unproductial work of investigators who spent many years upon it, Mr A. M. Chance perfected the well known Chance process of recovery, which consists, briefly, in treating the waste with carbonic acid gas, so liberating the sulphuretted hydrogen, which is burnt with just and only just sufficient air in a Claus kiln, wherein the sulphur is deposited and recovered.

The diagrams 108, 109, taken from a paper read by Mr Chance before the Society of Chemical Industry, March 1888, make the operation very plain.

In fig. 81, 1, 2, 3, 4, 5, 6, 7, are waste cylinders or carbonators, L the CO_2 main, C connecting main, E exit main, R return main.

The action of carbonic acid on calcium sulphide (in the presence of water) is to form calcium carbonate and sulphuretted hydrogen. But if the sulphuretted hydrogen be passed on to the further vat waste containing calcium sulphide, the latter absorbs it to form calcium sulphydrate, and this again gives up the whole of the sulphuretted hydrogen when subject to the action of carbonic acid. The process is therefore threefold:

(1) $CaS + H_2O + CO_2 = H_2S + CaCO_3$.
(2) $CaS + H_2S = CaS_2H_2$.
(3) $CaS_2H_2 + CO_2 + H_2O = CaCO_3 + 2H_2S$.

The process is now best described in Mr Chance's own words, fig. 108 being referred to:—

"At 7.0 a.m. Nos. 7 and 1 vessels were charged with fresh waste. The lime kiln gases were pumped direct into No. 3 vessel, and then through vessels Nos. 4, 5, 6, 7, and 1, by opening all the intermediate taps; the useless gases escaped from No. 1 vessel into the exit main, and thence through a purifier into the air for a period of 1h. 40m.

"At 8.40 the sulphuretted hydrogen gases from No. 5 were sufficiently strong for use, the calcium sulphide having mostly been converted into calcium sulphydrate; the sulphuretted hydrogen gases taken from No. 5 tested over 30 per cent. of sulphuretted hydrogen, whilst the useless gases from No. 1 tested only 1 per cent., thus showing that vat waste is a very efficient absorbent of sulphuretted hydrogen.

"The connections were then altered so that the sulphuretted hydrogen gases could be taken from No. 5 to the gas holder; No. 2 vessel, containing the partially carbonated waste, was put into series, and the lime-kiln gases were now pumped through Nos. 2, 3, 4 and 5, the sulphuretted hydrogen gases from No. 5 continuing to be taken to the gasholder for a period of 2h. 25m. till 11.5. It was then found that the sulphuretted hydrogen gases were under 30 per cent., and that Nos. 2 and 3 were carbonated so thoroughly that water filtered from the mud did not tinge lead paper; Nos. 2 and 3 were therefore emptied and re-charged.

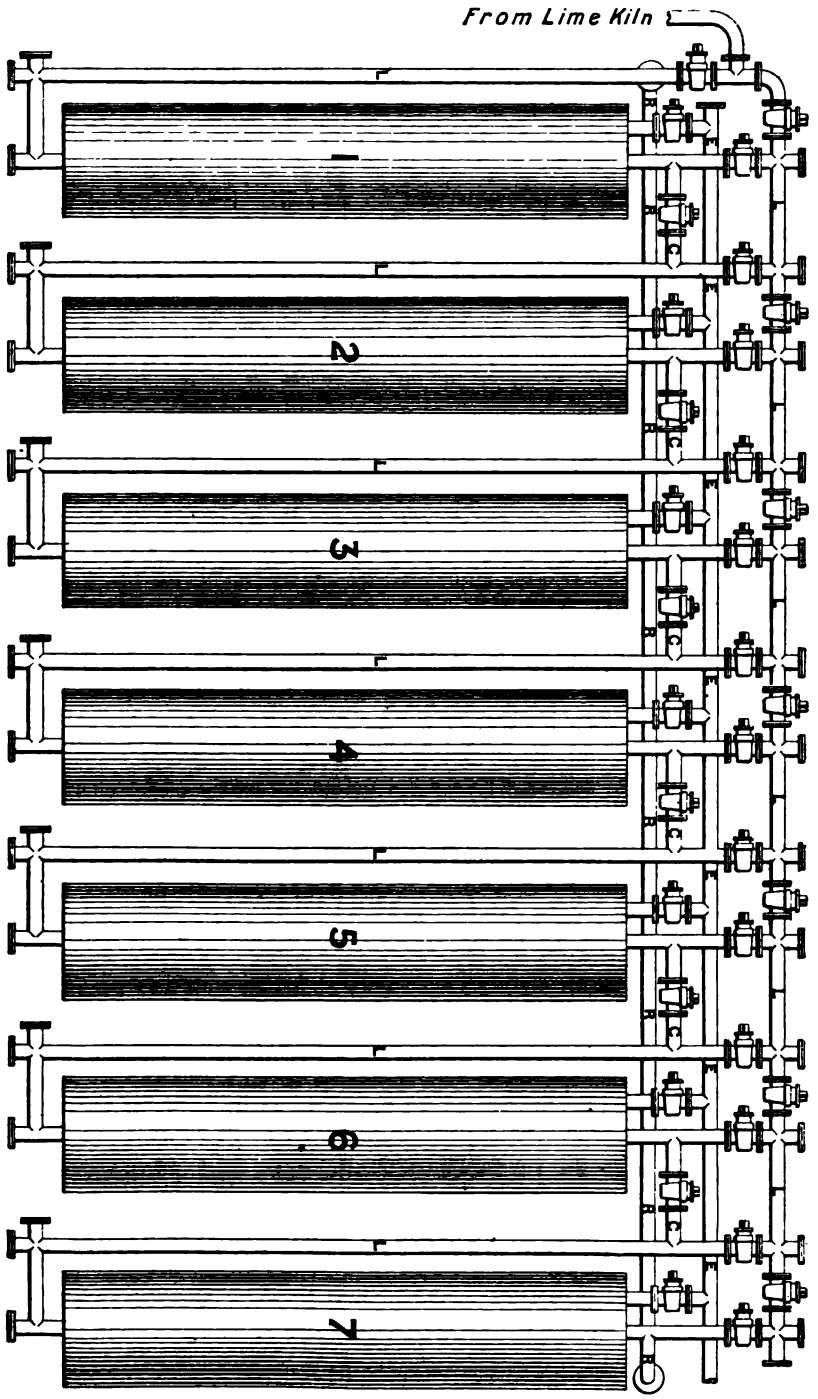

Fig. 108.

"At 11.5 a.m. the lime-kiln gases were pumped into No. 5, and thence through Nos. 6, 7, 1, 2, and 3; the useless gases issuing from No. 3 passed into the purifiers, and thence escaped until 12.25—*i.e.*, during 1h. 20m.

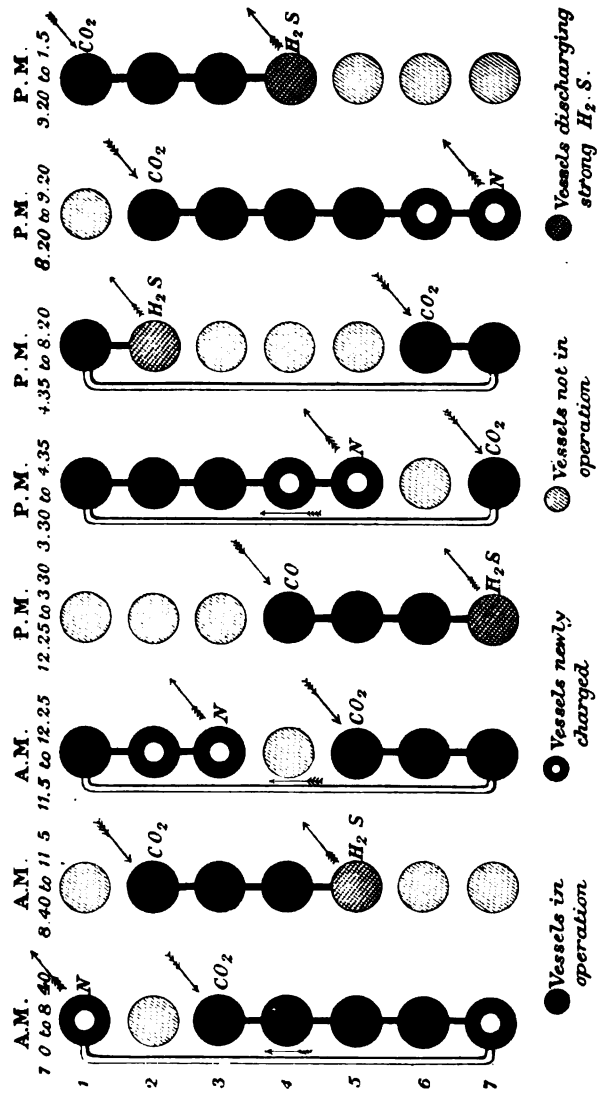

FIG. 109

"At 12.25 p.m. the lime-kiln gases were pumped into No. 4, containing partially carbonated waste, and thence through Nos. 5, 6, and 7; the sulphuretted hydrogen gases from No. 7 passing to the holder from 12.25 to 3.30—*i.e.*, during 3h. 5m.

"At 3.30. Nos. 4 and 5 were re-charged with fresh waste, the lime-kiln gases were pumped into No. 7, and thence through Nos. 1, 2, 3, 4, and 5; the useless gases from No. 5 passed away until 4.35—*i.e.* during 1h. 5m.

"From 4.35 till 8.20 the lime-kiln gases were pumped through Nos. 6, 7, 1 and 2, the sulphuretted hydrogen gases from No. 2 being simultaneously taken to the gasholder—*i.e.*, during 3h. 45m.

"At 8.20 Nos. 6 and 7 vessels having been re-charged, the lime-kiln gases were pumped through Nos. 2, 3, 4, 5, 6, and 7, the useless gases from No. 7 passing away until 9.20—*i.e.*, during one hour.

"At 9.20 the lime-kiln gases were pumped through Nos. 1, 2, 3, and 4 till 1.5, the sulphuretted hydrogen gases being meanwhile taken to the gasholder until 1.5—*i.e.* during 3h. 45m.

"At 1.5 p.m. Nos. 1 and 2 were re-charged, and the series of operations recommenced.

"It will thus be seen that during 1h. 40m., 1h. 20m., 1h. 5m., 1h., 5h. 5m., the useless gases were escaping, whilst during 2h. 25m., 3h. 5m., 3h. 45m., 3h. 45m., 13 hours, the valuable sulphuretted hydrogen gases were being used; but about forty-five minutes must be allowed for and deducted while the vessels were discharged and re-charged and the various taps altered."

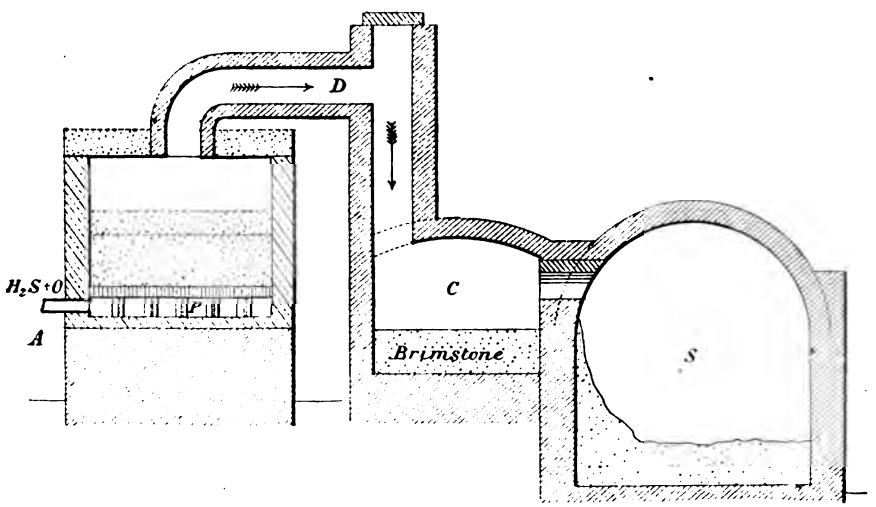

FIG. 109A.

The mixture of sulphuretted hydrogen and air in the proportion $2H_2S : O_2$ is passed at A into the Claus kiln (fig. 109A) through the perforated hearth P, on which there is a layer of iron oxide O, superimposed on broken bricks. Combustion takes place here, the oxide supplying heat to start the reaction, and the sulphur and steam pass on through D, C, and S. From the chamber

C liquid sulphur is run out and cast, and in the chamber S the vapour condenses as flowers of sulphur and is collected as such.

The desulphurised or carbonated mud is practically a waste. For a long time it was thought that it might be utilised for the manufacture of cement, as no doubt it could, but little up to the present has been done in the matter. Better material is abundant, and often the cost of material in cement making is low compared with that of the labour and fuel.

Unless made on the spot the consideration is out of the question, and as the survival of the Leblanc process is now such a precarious matter, it is questionable whether the capital requisite for cement making plant in the neighbourhood of the 'mud' will ever be forthcoming, even if it were proved to be excellent material for the purpose. But as left it is practically chalk, and so differs very distinctly from the old waste tipped before the days of sulphur recovery. These continue to yield, as many of them have done for a quarter of a century, offensive drainage, doubly offensive inasmuch as it pollutes both streams and atmosphere.

Such drainage or 'yellow liquor' varies to some extent, both in composition and volume, with the rainfall, but not so much as would be anticipated offhand. The sulphides on the surface soon become oxidised, but then a hard crust is formed and the interior is, unfortunately, well protected. To recover the sulphur by the Chance process would not be profitable now, since while the fresh waste contains 10 per cent. to 12 per cent. sulphur as sulphides, the old waste varies from nothing to about 2 per cent. or perhaps less.

In a few cases the old drainage is pumped from wells and used for letting down the fresh vat waste, but so far as tips away from works are concerned precipitation by means of iron salts is the only method likely to ensure an abatement of nuisance. When run into streams, an incrustation is formed on the banks and bed, which is most objectionable. The following results by Dr A. B. Hill give the composition of the old waste, drainage therefrom, and brook incrustation at Parbold, near Wigan :—

Results expressed as percentages.

	Alkali Waste.	Incrustation.	Drainage.
Total sulphur,	10·50	2·9	0·268
Sulphur as sulphate.	9·67	1·87	0·036
Sulphur as sulphide,	0·015	0·069	0·078
Oxidisable sulphur (by difference),	0·83	1·03	0·232
Carbonic acid,	7·99	16·50	none
Coke,	5·07	1·82	none
Silicious matter,	13·82	10·86	0·002
Oxide of iron and alumina,	1·20	0·77	0·006
Lime,	21·28	22·90	0·300
Magnesia,	0·23	0·54	trace

The effect of the drainage on the stream (especially where, as in cases of sewage contamination, carbonic acid is dissolved in the stream) is first to give it a charge of sulphuretted hydrogen; a milkiness is also produced, due to the precipitation of carbonate of lime; and in addition the stream is probably robbed of oxygen by the oxidisable sulphur other than that present as sulphide. The effect of the drainage on plant life was investigated by Dr Gerland in 1897, who reported to the Ribble Joint Committee as follows:—

"A sample of drainage was collected, May 14th, from the outfall south of the Canal Bridge, for the purpose of ascertaining its effect upon animal and vegetable life in the river, upon which the self purification of the river depends largely.

"Analyses yielded the following results:—

100,000 parts contain—

Sulphuric acid (H_2SO_4),	132·64	Sulphur as polysulphides,	17·42
Sulphurous acid (H_2SO_3),	2·808	Lime,	120·17
Hyposulphurous acid ($S_2O_3H_2$),	4·03	Magnesia,	4·66
Hydrogen sulphide (H_2S),	38·20	Oxide of cobalt,	0·503
		Trace of soda.	

"These may be assumed to be combined as follows:—

Calcium sulphate,	184·076	Calcium sulphide,	26·802
Calcium sulphite,	27·120	Hydrogen sulphide,	30·965
Magnesium sulphite,	12·116	Sulphur,	17·424
Calcium hyposulphite,	53·732		

"*Effect of Parbold Liquor upon Animalculæ.*—The only species suitable for the purpose that could be procured at this season was Cyclopes (water flea). One part Parbold liquor was mixed with 1400 parts of well-aired tap water. The Cyclopes became gradually quiet; most of them were dead in half an hour. By exposing the water in a thin layer to the air a few recovered. With one part of Parbold liquor in 700 parts, all life was extinct in a quarter of an hour.

"*Effect upon various Water-plants.*—The plants available were:—Hornwort (*Ceratophyllum demersum*); *Chara*; Moss (*Fontinalis antipyretica*); Conferva; Duckweed (*Lemna minor*); *Sphagnum*. The following results were obtained:—

"May 21.—One part Parbold liquor to 1000 parts tap water run in a slow stream into a glass with the water-plants exposed to a good diffused light. The plants look fresh except the hornwort.

"May 22.—Two parts Parbold liquor to 1000 parts water. Hornwort is fading, the other plants fresh.

"May 23.—The same solution, the same result.

"May 24.—Continued with the same solution. Hornwort appears dead. Chara very much faded.

"May 25.—Continued running the same solution over the plants. Chara appears dead. Fontinalis, the moss, turns brown in the older parts; the young points of the shoot are still green. Sphagnum and conferva look fresh.

"May 26.—Twenty parts Parbold liquor to 1000 parts of water.

"May 27 and 28.—Continued with the same liquor.

"May 29.—Thirty-three parts Parbold liquor to 1000 parts of water.

"May 30.—Forty parts Parbold liquor to 1000 parts of water. The browning of fontinalis has progressed. Sphagnum does not look very healthy. Conferva and lemna are still thriving. Will be continued.

"These trials prove that the drainage from the Parbold waste is fatal to lower animal life, even in great dilution with aërated water, but that its effect on water-plants is not so bad.

"*July 20, 1897.—Parbold Drainage from Soda Waste. Effect upon Water-Plants. Second Report.*

"Since sending you my report on May 30, I have continued the experiment, and herewith beg to state the results. From May 30 to June 2 the Parbold liquor was diluted with ten times its quantity of aërated water. The plants looked healthy, and the chlorophyll had darkened considerably, giving the appearance of intense vegetation. From the 2nd to the 5th June the strength of the solution running over the plants was increased to the proportion of four parts of water to one of liquor, and from that day to the 15th June in the proportion of three to two. The green parts appeared still darkening, and the plants appeared healthy. Sufficient liquor was left in the store vessel to run for seven days.

"On July 15 all plants were apparently dead, and although transferred to clean water after thorough washing, none of them has revived. The darkening of the chlorophyll, it seems, was the first symptom of disease—probably by the iron of the chlorophyll being separated from the molecule. I am thus forced to the conclusion that the water plants may live and thrive in diluted Parbold effluent for a certain time, but that long continued contact with it causes their death. B. WILH. GERLAND."

The most satisfactory scheme of treatment yet adopted from a rivers pollution point of view is the precipitation of the sulphides followed by the impounding of the tank effluent to obtain as much oxidation as possible before discharge into the stream, or the repeated filtration of it in filters similar to those shown in fig. 110. An interesting, but financially questionable, method, which on the face of it is nearly as applicable to old as to new waste, is that described by Dingl, *Polyt. Journ.*, cclv. 206–208 (*J. C. S.*, vol. xlviii. p. 618).

The soda residues from the Leblanc process are introduced into a

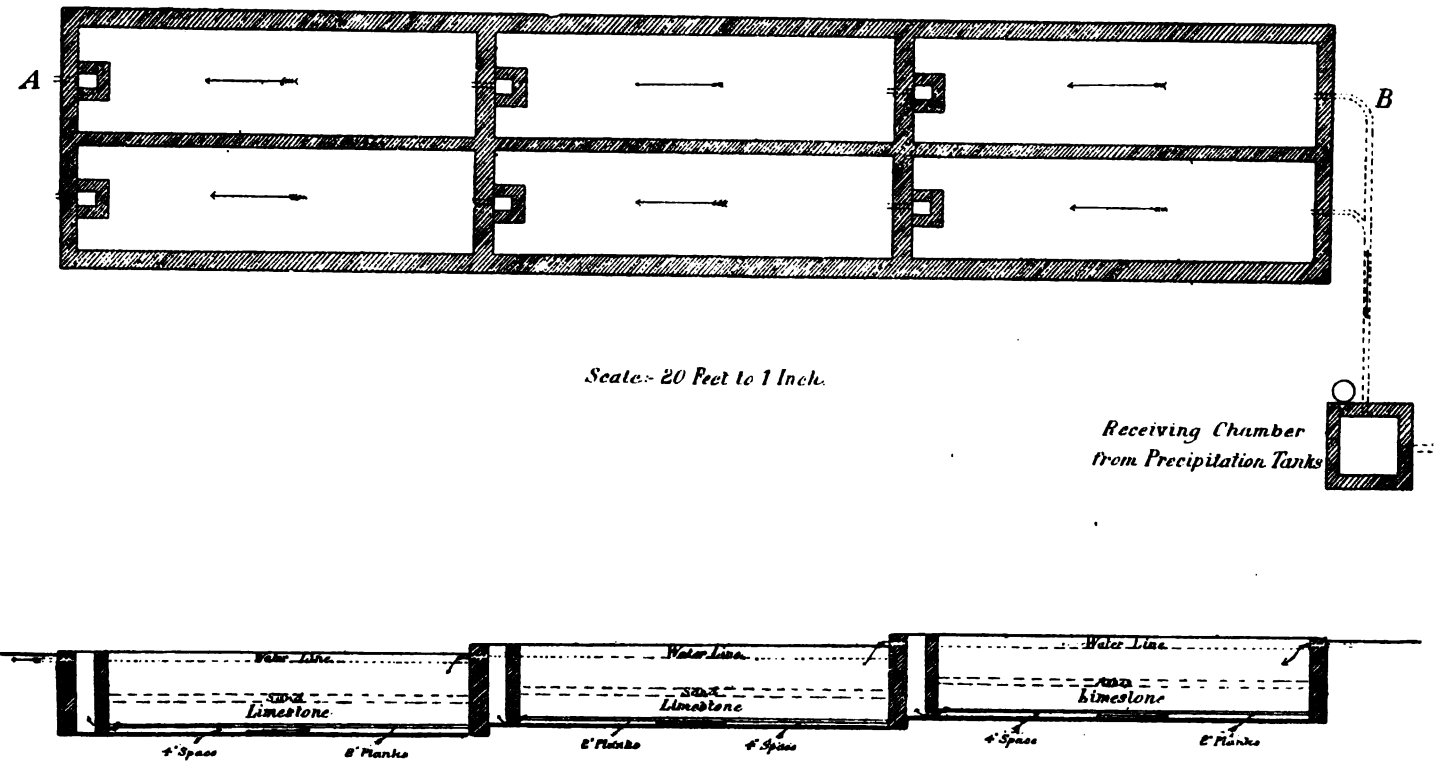

FIG. 110.—Filters for Alkali Waste Drainage, Messrs J. Riley & Sons' Chemical Works, Hapton.

kneading machine, mixed with about 10 per cent. of sawdust and from 10–15 per cent. of hot water. A stiff unctuous dough is obtained, which is formed into tubes by compression. These are 250 mm. long, have an external diameter of 45 mm., and an internal diameter of 20 mm. They are put on frames placed under an open shed and subjected to the action of atmospheric oxygen. Oxidation ensues, which rapidly hardens the mass, so that after the lapse of two days the tubes are brittle enough to be broken into pieces without falling to a powder. The mixture is then heated in retorts whilst treated with steam. 100 kilos. residue contain 8 kilos. carbon in the form of coke dust, and 4 kilos. from the 10 kilos. of sawdust added, making a total of 12 kilos. carbon, which require 18 kilos. water in the form of steam for their conversion into gas. During the decomposition of the carbon, carbonic oxide and hydrogen are formed in the interior of each piece of the prepared mass, in quantities sufficient to effect the complete reduction of the oxides of sulphur (thiosulphuric acid, tetrathionic acid, sulphurous acid, dithionic acid, and sulphuric acid) contained in the residues. Thus almost all the sulphur is converted into calcium sulphide, which on exposure to heat and superheated steam is decomposed into sulphuretted hydrogen and calcium oxide. The object of adding sawdust to the residues is to obtain a mass of considerable porosity, without which the steam process cannot be worked successfully. The residue left in the retorts contains from 87–90 per cent. of caustic lime, and is used for the preparation of mortar or for manuring purposes.

Colliery Waters.

The very polluting waters delivered from mines of all descriptions by the drainage conduits or pumps are exempt from the operations of the Rivers Pollution Acts, though, at common law, riparian owners have often succeeded in closing mines because of damage to previously existing interests.

The nature of such drainage waters is fairly constant, their burden nearly always being a great load of both dissolved and suspended matter which is poisonous to fish, and detrimental to streams from every point of view. In the Cornish districts the streams are turned milky white by china clay, in colliery districts red, or slate coloured according as the preponderating constituent of the load is iron oxide or shale, and in quarrying districts it naturally varies with the nature of the stone.

Even were perfect filtration insisted upon, the saline contents of the drainage would be sufficient to 'deaden' any but rivers of considerable volume.

Wash waters from coal, however, come under the provisions of the Pollution Acts, but the tax on industry here is only slight, as the deposited 'smalls' are worth nearly the cost of interception.

The poorer seams of coal cannot be worked unaccompanied by the delivery at the pit mouth of considerable quantities of shale and clay, and after the larger pieces have been removed by hand picking, the smaller are separated by washing in the same manner as nearly all valuable ores are separated from gangue or dross only adhering mechanically. I am indebted to Dr Wilson of the West Riding Rivers Board for the figs. 111 and 112, showing two forms of washers, and the descriptions are from his report to that Board, as well as the tables of analyses, and figs. 113–116.

"A is the elevator for raising the coal to be washed into the shoot B, which delivers coal and water together into the trough D. C is the cistern containing the water supply, fed by an inlet pipe from the pulsometer H, and delivering by an outlet pipe into the shoot B. E is an endless chain on which are fixed the weirs or scrapers which draw the heavier dirt up to the top of the washer. F is a revolving cylindrical screen for separating the washed coal from the water, and G is a tank for receiving the water, with a pulsometer pump H for returning the water back to the cistern to be re-used. I is a waggon into which the heavier dirt falls from the upper end of the trough.

"In the hopper washers the broken coal is placed in a hopper-shaped receptacle into which a constant stream of water is allowed to flow. The contents of the hopper are kept constantly agitated, while the impurities sink to the bottom, and from time to time, through a valve provided for the purpose, are dropped into a waggon underneath; the coal, rising to the top, is carried on by the water constantly overflowing, and is recovered, as in the case of the trough washers, by means of screens or settling tanks.

"The chief modifications of the hopper washers are in the means adopted for keeping the contents of the hopper in a state of agitation. Sometimes the water is forced in at a considerable pressure at the bottom of the hopper; sometimes air is forced in; while in other machines the coal and water are stirred up by spokes radiating from a revolving shaft, or by plungers, the mechanism being in the one case like the dashers of a revolving churn, and in the other like the plunger of the old-fashioned churn.

"In some hopper washers a quantity of felspar, which has a specific gravity midway between that of the coal and that of the dirt, is introduced into the hopper, and when agitated with the coal and water, forms a layer between the clean coal and the dirt, and facilitates the separation of the two.

"Fig. 112 gives diagrammatically the elevation of a hopper washer of a common type. K is the waggon of coal to be washed, L an elevator, and M a shoot for delivering it into the hopper N. O is the axle of the revolving stirring apparatus. P is the water cistern, with feed pipe Q coming from the pulsometer pump V, and delivery pipe R discharging into the bottom of the hopper. S is a revolving cylindrical screen and T a slanting fixed screen

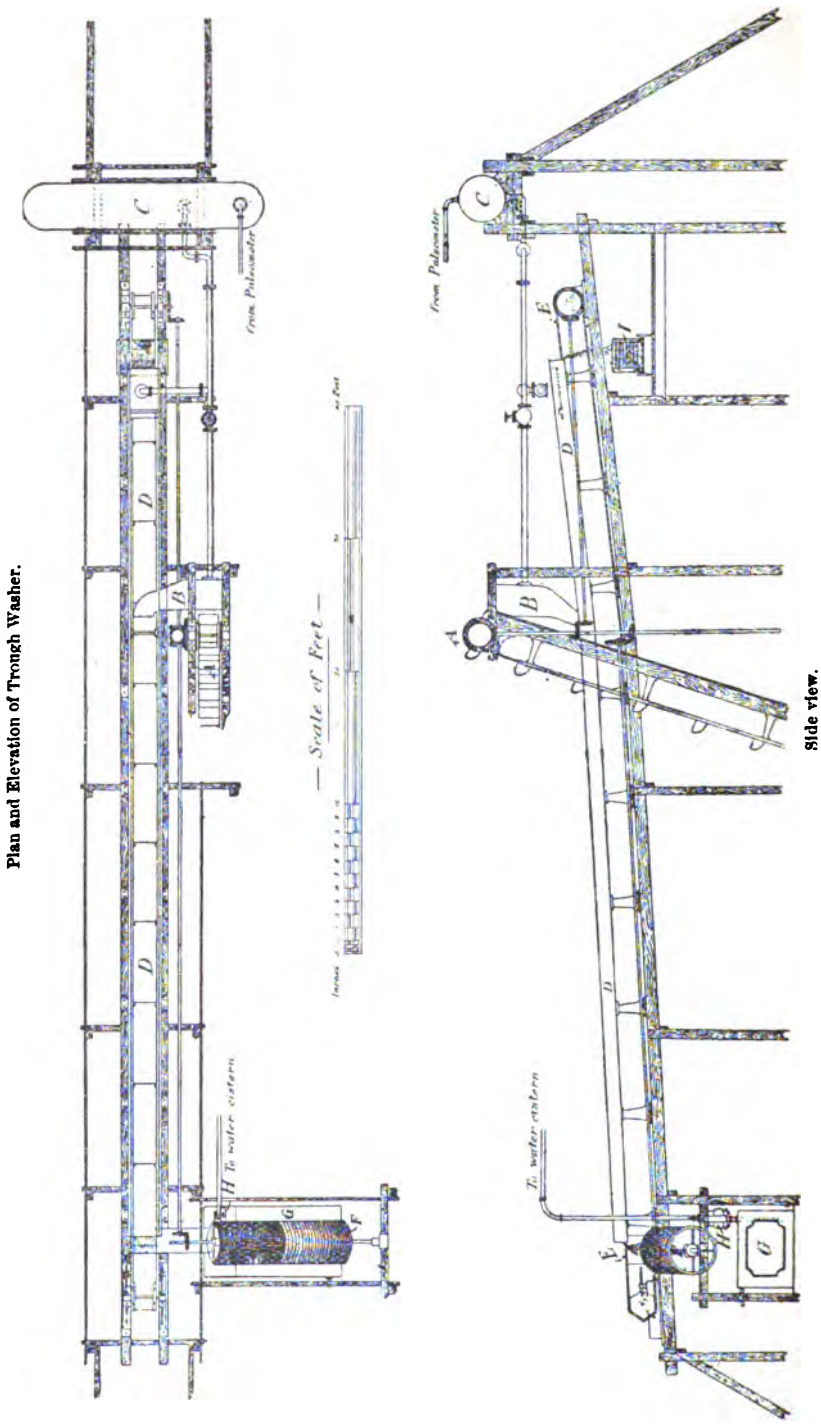

Plan and Elevation of Trough Washer.

Side view.

FIG. 111.

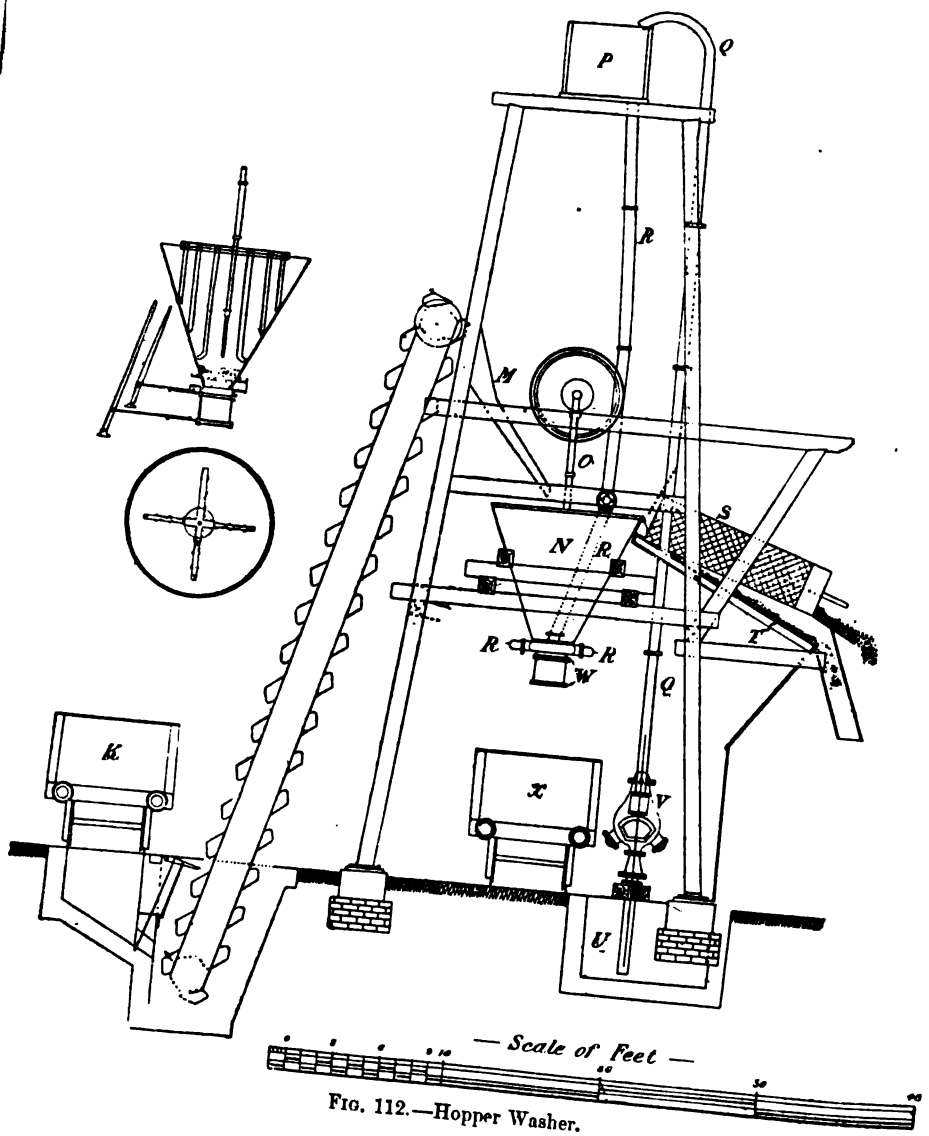

FIG. 112.—Hopper Washer.

for separating the coal from the water. U is the well for catching the water from these screens, from which it is pumped back by the pulsometer V into the cistern to be re-used. W points out two valves at the bottom of the hopper by which the discharge of heavier dirt into the waggon X below is governed."

As the objectionable matter in these coal wash waters is principally in suspension, and as, moreover, that in solution is largely mineral in character and could only be removed with difficulty, settlement, or settlement and filtration, is all that can be reasonably called for.

Figs. 113 to 116, diag. 28, are representative samples of settling tanks and filters put down in the West Riding of Yorkshire. In some cases the water is re-used for washing.

Table A gives the solid figures for samples taken from the washers crude waste, the same after treatment, and the clean supply or 'water used.'

Tables B and C explain themselves. The table on page 258 gives particulars of coal referred to.

The amount of refuse, large and small, washed out of the coal varies greatly with different varieties of coal, but roughly amounts to 13 per cent. In one case, where a rather dirty coal is washed, the total loss in washing was found to be from 15 to 18 per cent., of which about 12 per cent. was rough dirt and 3 to 5 per cent. was fine dirt, carried away in suspension in the water.

An accurate estimate of water used is very difficult to obtain, and few colliery proprietors have been able to furnish it. It has been estimated at 1500 gallons per ton washed, for washing smudge, while to the Royal Commission of 1868 it was stated by one witness (Fifth Report, vol. ii. part iv. p. 187) to be 600 gallons per ton, and by another (p. 193) 1120 gallons.

In one case where the water is mostly re-used the information has been obtained that 990 gallons of water which has passed through the washer are pumped back for re-use for every ton of coal used, while at the same time 135 gallons of clean water per ton are pumped into the washer. Some of this latter quantity will be absorbed by the coal dirt removed from the washer, so that not more than 100 gallons per ton will be required to be purified. These figures give a total quantity of 1125 gallons of water required to wash a ton of coal, and one-eleventh part of this as final effluent.

In another case, where almost all the water is re-used, 125 gallons of clean water are pumped into the washer for every ton of coal washed, but no estimate can be obtained of the amount of dirty water re-used.

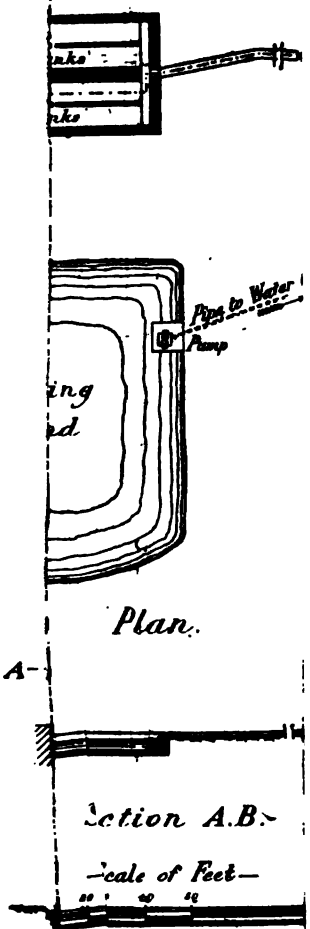

Fig. 115.

TABLE A.—Coal-washing Waters before and after use and after Purification.

Number of Colliery.	Sample.	Date Taken.	Solids in Solution.								Solids in Suspension.			Total Solids.
			Siliceous Matter.	Calcium Salts (as CaO).	Magnesium Salts (as MgO).	Chlorides (as NaCl).	Sulphates (as SO_3).	Loss on Ignition.	Ash.	Total.	Loss on Ignition.	Ash.	Total.	
2	Water used, .	26/9/98	1·25	11·10	8·0	14·64	22·85	6·85	71·42	78·27	...	...	...	78·27
2	From washer, .	26/9/98	2·0	37·85	13·82	444·28	32·42	56·0	492·2	548·20	200·0	91·8	291·8	840·0
7	Water used, .	5/9/98	0·91	15·61	12·37	23·42	40·50	14·28	112·0	126·28	...	...	...	126·28
7	From washer, .	5/9/98	0·71	16·73	10·70	50·37	41·27	14·14	141·0	155·14	4055·28	290·0	4345·28	4500·42
7	Final effluent, .	5/9/98	0·20	8·17	8·71	39·70	33·64	17·0	129·0	146·0	7·0	16·0	23·0	169·0
27	Water used, .	5/9/98	0·40	21·94	15·54	19·28	66·07	26·64	154·0	180·64	...	...	...	180·64
27	From washer, .	5/9/98	0·60	23·37	14·41	196·14	69·42	23·0	333·0	356·0	9086·43	3403·43	12489·86	12845·86
29	Water used, .	12/9/98	0·15	4·15	1·50	5·28	7·27	5·84	2·24	28·24	...	...	...	28·24
29	From washer, .	12/9/98	0·80	10·07	2·68	205·14	21·97	5·21	243·21	248·42	12656·64	2017·35	14674·0	14922·42
35	Water used, .	8/8/98	2·40	26·87	20·90	7·02	168·95	39·57	285·0	324·57	0·0	12·43	12·43	337·0
35	From washer, .	8/8/98	0·10	18·51	15·64	9·37	137·22	27·0	260·43	287·43	2511·43	454·0	2965·4	3252·8
35	Final effluent, .	8/8/98	0·20	18·03	13·70	8·20	120·82	23·0	233·4	256·4	...	...	...	256·4

TABLE B.—COAL-WASHING WATERS TAKEN DIRECT FROM THE WASHERS.

Number of Colliery.	Sample.	Date taken.	Solids in Solution.			Solids in Suspension.			Total of Solids in Solution and Suspension.			
			Loss on Ignition.	Ash.	Total.	Loss on Ignition.	Ash.	Total.	Loss on Ignition.	Ash.	Total.	
1	From washer, .	30/9/98	40·0	353·6	393·6	320·0	46·4	366·4	360·0	400·0	760·0	
2	,, ,, .	26/9/98	56·0	492·2	548·2	200·0	91·8	291·8	256·0	584·0	840·0	
3	,, ,, .	9/8/98	29·0	329·0	358·0	53·0	80·0	133·0	82·0	409·0	491·0	
4	,, ,, .	8/9/98	63·0	500·0	563·0	1760·3	356·1	2116·4	1823·3	856·1	2679·4	
6	,, ,, .	13/5/98	1·8	108·8	110·6	14999·3	2513·4	17512·7	15001·1	2622·2	17623·3	
7	,, ,, .	5/9/98	14·1	141·0	155·1	4055·3	290·0	4345·3	4069·4	431·0	4500·4	
8A	,, ,, .	27/7/98	60·0	579·0	639·0	3114·7	867·6	3982·3	3174·7	1446·6	4621·3	
8B	,, ,, .	27/7/98	73·1	476·4	549·5	2436·8	311·3	2748·1	2509·9	787·7	3297·7	
9	,, ,, .	31/8/98	6·0	102·0	108·0	3262·7	1530·4	4793·1	3268·7	1632·4	4901·1	
10	,, ,, .	12/9/98	73·0	767·0	840·0	4641·0	1236·4	5877·4	4714·0	2003·4	6717·4	
10A	,, ,, .	14/9/98	30·0	366·0	396·0	699·0	133·0	832·0	729·0	499·0	1228·0	
11	,, ,, .	19/8/98	14·0	240·0	254·0	10851·1	2068·6	12919·7	10865·1	2308·6	13173·7	
12	,, ,, .	19/8/98	31·0	265·7	296·7	173·0	183·3	356·3	204·0	449·0	653·0	
14	,, ,, .	4/9/98	14·4	269·6	284·0	2929·5	1464·5	4394·0	2944·0	1734·1	4678·1	
18	,, ,, .	1/8/98	10·0	86·4	96·4	845·4	420·1	1265·5	855·4	506·5	1362·0	
19	,, ,, .	18/5/98	32·6	185·1	217·7	4629·9	1839·1	6469·0	4662·5	2024·2	6686·7	
21	,, ,, .	22/8/00	20·0	446·0	466·0	456·0	59·3	515·3	476·0	505·3	981·3	
24	,, ,, .	15/8/00	10·0	148·6	158·6	909·7	260·6	1170·3	919·7	409·2	1328·9	
27	,, ,, .	5/9/98	23·0	333·0	356·0	9086·4	3403·4	12489·8	9109·4	3736·4	12845·8	
29	,, ,, .	12/8/98	5·2	243·2	248·4	12656·6	2017·4	14674·0	12661·8	2260·6	14922·4	
30	,, ,, .	14/8/98	40·0	494·0	534·0	3182·6	220·3	3402·9	3222·6	714·3	3936·9	
33	,, ,, .	8/9/98	11·0	406·0	417·0	19347·0	3779·7	23126·7	19358·0	4185·7	23543·7	
33A	,, ,, .	1/6/98	16·0	240·0	256·0	217·0	149·0	366·0	233·0	389·0	622·0	

TABLE C.—COAL-WASHING WATERS.—EFFLUENTS FROM THE WORKS TO WHICH THE ILLUSTRATIONS REFER.

Sample.	Date taken.	Solids in Solution.			Solids in Suspension.			Total Solids.			Remarks.
		Loss on Ignition.	Ash.	Total.	Loss on Ignition.	Ash.	Total.	Loss on Ignition.	Ash.	Total.	
Final effluent, .	7/9/98	...	...	...	...	...	...	25·0	155·0	180·0	Good.
,, ,, .	23/10/00	...	...	...	...	...	...	14·0	90·0	104·0	,,
,, ,, .	8/8/98	...	...	...	..	...	...	23·0	233·4	256·4	,,
,, ,, .	19/10/99	22·0	325·0	347·0	4·0	10·0	14·0	26·0	335·0	361·0	Bad.
,, ,, .	17/11/99	24·0	274·0	298·0	3·0	11·0	14·0	27·0	285·0	312·0	,,
,, ,, .	9/12/99	27·2	276·4	303·6	1·5	4·2	5·7	28·7	280·6	309·3	Unsatisfactory.
,, ,, .	9/12/99	23·6	308·8	332·4	3·3	2·4	5·7	26·9	311·2	338·1	,,
,, ,, .	12/9/00	...	...	...	...	...	...	21·0	294·0	315·0	Good.
,, ,, .	15/11/00	20·4	295·6	316·0	8·5	8·8	17·3	28·9	304·4	333·3	Bad.

TABLE D.—COAL-WASHING WATERS BEING RE-USED.

Number of Colliery.	Sample.	Date taken.	Solids in Solution.			Solids in Suspension.			Total Solids in Solution and Suspension.			Remarks.
			Loss on Ignition.	Ash.	Total.	Loss on Ignition.	Ash.	Total.	Loss on Ignition.	Ash.	Total.	
10	Tank to reservoir,	12/9/98	49·0	728·0	777·0	10·0	33·0	43·0	59·0	761·0	820·0	
12	From settling tank,	19/8/98	...	...	...	...	...	...	24·4	248·0	272·4	
22	Overflow of well, .	11/8/98	15·6	254·4	270·0	1216·4	423·9	1640·3	1232·0	678·3	1910·3	
23	,, ,, .	23/8/98	6·7	231·7	238·4	28·5	35·9	64·4	35·2	267·6	302·8	
30	Tanks to reservoir,	14/8/98	44·4	495·1	530·5	4·7	17·7	22·4	49·1	512·8	561·9	
32	Overflow of well, .	7/9/98	20·0	168·4	188·4	1410·6	428·0	1838·6	1430·6	596·4	2027·0	
35	,, ,, .	8/8/98	27·0	260·4	287·4	2511·4	454·0	2965·4	2538·4	714·4	3252·8	

TABLE E.—Coal-washing Waters after Treatment.

Number of Colliery.	Sample.	Date Taken.	Solids in Solution.			Solids in Suspension.			Total of Solids in Solution and Suspension.			Remarks.
			Loss on Ignition.	Ash.	Total.	Loss on Ignition.	Ash.	Total.	Loss on Ignition.	Ash.	Total.	
1	Final effluent, .	30/9/98	60·8	346·4	407·2	3·2	1·6	4·8	64·0	348·0	412·0	Unsatisfactory.
1	,, ,, .	19/9/00	47·0	410·0	457·0	8·0	3·0	11·0	55·0	413·0	468·0	Bad.
3	,, ,, .	9/8/98	24·0	314·0	338·0	1·0	1·0	2·0	25·0	315·0	340·0	Good.
6	,, ,, .	18/10/99	32·1	179·6	211·7	2·9	3·2	6·1	34·9	182·8	217·7	Unsatisfactory.
6	,, ,, .	10/11/99	27·7	155·6	183·3	...	...	1·1	...	...	184·4	Good.
6	,, ,, .	30/8/00	31·2	184·0	215·2	5·3	1·8	7·1	36·5	185·8	222·3	Unsatisfactory.
6	,, ,, .	6/11/00	30·0	175·0	205·0	...	1·9	1·9	30·0	176·9	206·9	Good.
7	,, ,, .	5/9/98	17·0	129·0	146·0	7·0	16·0	23·0	24·0	145·0	169·0	Bad.
7	,, ,, .	20/10/99	18·0	112·0	130·0	0·0	6·0	6·0	18·0	118·0	136·0	Unsatisfactory.
8c	,, ,, .	2/11/99	...	...	...	...	...	...	33·0	163·0	196·0	Good.
8c	,, ,, .	21/11/99	19·0	88·0	107·0	15·0	14·0	29·0	34·0	102·0	136·0	Bad.
8c	,, ,, .	6/9/00	59·0	389·0	448·0	3·8	5·2	9·0	62·8	394·2	457·0	Unsatisfactory.
8c	,, ,, .	24/10/00	90·0	468·0	558·0	261·2	84·0	345·2	351·2	552·0	903·2	Bad.
13	,, ,, .	26/9/00	29·0	184·0	213·0	5·0	5·0	10·0	34·0	189·0	223·0	Unsatisfactory.
16	,, ,, .	12/9/00	6·0	182·0	188·0	209·0	525·0	734·0	213·0	707·0	922·0	Bad.
18	,, ,, .	1/8/98	...	...	...	...	...	...	9·4	53·0	62·4	Good.
18	,, ,, .	12/10/99	...	...	...	...	...	...	24·0	88·0	112·0	,,
18	,, ,, .	8/11/99	...	...	...	...	...	...	18·0	66·8	84·8	,,
20	,, ,, .	11/8/98	...	...	...	...	...	...	86·0	507·0	593·0	,,
20	,, ,, .	11/10/99	...	...	...	...	...	...	74·6	443·8	518·4	,,
20	,, ,, .	11/10/99	19·0	113·0	132·0	12·0	71·0	83·0	31·0	184·0	215·0	Bad.
20	,, ,, .	9/11/99	...	...	...	...	...	...	79·0	506·0	585·0	Good.
20	,, ,, .	13/7/00	81·0	465·0	546·0	107·0	56·0	163·0	188·0	521·0	709·0	Bad.
20	,, ,, .	14/8/00	121·0	935·0	1056·0	...	...	21·6	...	...	1077·6	,,
20	,, ,, .	4/7/00	109·0	779·0	888·0	22·4	20·0	42·4	131·4	799·0	930·4	,,
20	,, ,, .	8/11/00	176·0	1144·0	1320·0	15·4	14·4	29·8	191·4	1158·4	1173·8	,,
23	,, ,, .	23/8/98	7·6	216·4	224·0	6·4	5·2	11·6	14·0	221·6	235·6	,,
23	,, ,, .	16/10/99	23·0	494·0	517·0	9·0	40·0	49·0	32·0	534·0	566·0	,,
23	,, ,, .	15/11/99	16·0	129·0	145·0	14·0	193·0	207·0	30·0	322·0	352·0	,,

TABLE E.—*continued.*

Number of Colliery.	Sample.	Date Taken.	Solids in Solution.			Solids in Suspension.			Total of Solids in Solution and Suspension.			Remarks.
			Loss on Ignition.	Ash.	Total.	Loss on Ignition.	Ash.	Total.	Loss on Ignition.	Ash.	Total.	
23	Final effluent, .	8/11/00	16·0	193·0	209·0	31·5	15·9	47·4	47·5	208·9	256·4	Bad.
24	,, ,, .	19/10/99	14·0	164·0	178·0	1·6	1·0	2·6	15·6	165·0	180·6	Good.
24	,, ,, .	25/11/99	...	...	...	...	...	...	19·0	253·0	272·0	,,
24	,, ,, .	9/11/00	25·0	130·0	155·0	15·7	9·7	25·4	40·7	139·7	180·4	Bad.
24A	,, ,, .	16/10/99	...	...	...	...	...	...	30·0	233·0	263·0	Good.
24A	,, ,, .	2/11/99	...	...	...	...	...	...	177·0	1033·0	1210·0	,,
24A	,, ,, .	10/9/00	...	...	...	...	...	...	107·0	596·0	703·0	,,
24A	,, ,, .	8/11/00	128·0	822·0	950·0	1·0	3·1	4·1	129·0	825·1	954·1	Fair.
24B	,, ,, .	26/9/00	63·0	261·0	324·0	428·0	147·0	575·0	491·0	408·0	899·0	Bad.
27	,, ,, .	17/11/99	31·0	183·0	214·0	1751·0	443·0	2194·0	1782·0	626·0	2408·0	,,
28	,, ,, .	22/11/99	44·0	272·0	316·0	546·0	880·0	1426·0	590·0	1152·0	1742·0	,,
32	,, ,, .	7/9/98	...	...	...	...	...	...	25·0	155·0	180·0	Good.
32	,, ,, .	23/10/00	...	...	...	...	...	...	14·0	90·0	104·0	,,
33	,, ,, .	8/9/98	...	...	...	...	...	...	24·0	477·0	501·0	,,
33	,, ,, .	4/9/00	18·0	112·0	130·0	...	...	3·6	...	...	133·6	Fair.
33A	,, ,, .	1/6/98	3·0	256·0	259·0	51·0	127·6	178·6	54·0	383·6	437·6	Bad.
33A	,, ,, .	15/11/99	...	...	...	...	...	...	26·0	350·0	376·0	Good.
33A	,, ,, .	30/9/00	...	...	...	...	...	...	14·4	513·2	527·6	,,
33A	,, ,, .	30/10/00	13·0	546·0	559·0	6·0	6·2	12·2	19·0	552·2	571·2	Bad.
35	,, ,, .	8/8/98	...	...	...	...	...	...	23·0	233·4	256·4	Good.
35	,, ,, .	19/10/99	22·0	325·0	347·0	4·0	10·0	14·0	26·0	335·0	361·0	Bad.
35	,, ,, .	17/11/99	24·0	274·0	298·0	3·0	11·0	14·0	27·0	285·0	312·0	,,
35	,, ,, .	9/12/99	27·2	276·4	303·6	1·5	4·2	5·7	28·7	280·6	309·3	Unsatisfactory.
35	,, ,, .	12/9/00	...	...	...	...	...	...	21·0	294·0	315·0	Good.
35	,, ,, .	15/11/00	20·4	295·6	316·0	8·5	8·8	17·3	28·9	304·4	333·3	Bad.
36	,, ,, .	12/9/00	...	...	...	...	...	...	40·0	168·0	208·0	Good.

TABLE showing the descriptions of Coal won at the Collieries referred to in Tables A, B, D and E.

No. of Colliery.	Kind of Coal.
1.	Silkstone, Haigh Moor and Diamond.
2.	Kent Thick, Ardsley and Lidgate.
3.	Barnsley, Bottom Hards and Softs.
4.	Silkstone and Middleton Main.
6.	Barnsley Bottoms.
7.	Black Bed (local name).
8A.	Barnsley Hards and Softs.
8B.	Barnsley Hards and Softs.
8C.	Barnsley.
9.	Silkstone (Barnsley New Hards and Wheatley Line, worked but not washed).
10.	Warren House or Diamond, Haigh Moor and Silkstone, all mixed for washing.
10A.	Haigh Moor.
11.	Silkstone.
12.	Silkstone.
13.	Black Bed and Shetcliffe Bed.
14.	Beeston Black Bed.
16.	Top Beeston and Middleton.
18.	Flockton, Parkgate, Silkstone and Swilley (cannel).
19.	Warren House Bottom Softs.
20.	Park Gate and Swallow Wood.
21.	Silkstone.
22.	Parkgate.
23.	Parkgate and Silkstone.
24.	Barnsley and small amount of High Hazels.
24A.	High Hazels, Barnsley, Parkgate, Swallow Wood and Silkstone.
27.	Middleton, Flockton and Camell.
28.	Haigh Moor.
29.	Black Bed and Beeston.
30.	Haigh Moor.
33A.	Parkgate.
35.	Parkgate, Thorncliffe, Silkstone and Whin Moor.
36.	Parkgate, Thorncliffe and Silkstone.

GALVANISERS' WASTE.

Iron sheets, wire, or other articles of iron are prepared for the molten zinc bath by being immersed in a weak solution of sulphuric or hydrochloric acid.

A sulphate or chloride of iron solution is gradually formed, and as this becomes stronger and the acid weaker, it is less useful for its purpose, and finally it is disposed of as waste.

In the Black Country most of the galvanising works have by some means or other managed to get connections with the local authorities' sewers. The objections to the admission of the waste to the sewers are twofold. First, the acidity of the waste or pickle and its resulting action on the sewer joints; and second, the superabundance of iron salts or acid in the sewage itself, which requires extra lime at the outfall works for neutralisation.

In the case of Wolverhampton, when the population was 80,000 and the sewage flow about 2,000,000 gallons per diem, the amount of lime used for neutralisation was as much as 2000 tons per annum, or about 40 grains per gallon of sewage, instead of the average 15 grains.

The 'Pickle,' under certain private Acts, must first be neutralised before the discharge into the sewers, but this is not always done, one case being

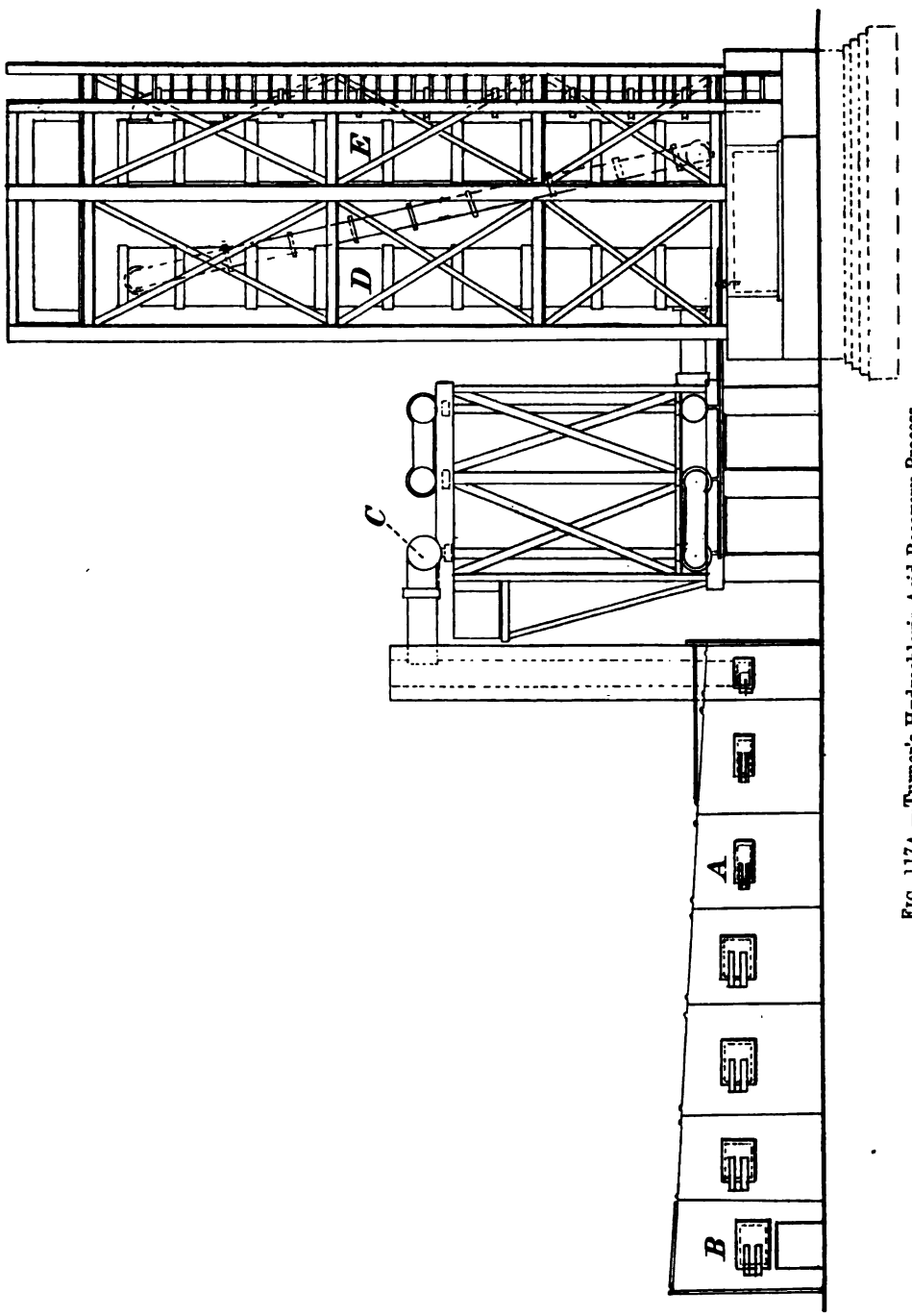

Side Elevation.

FIG. 117A.—Turner's Hydrochloric Acid Recovery Process.
Scale, ¼ inch = 1 foot.

cited at a prosecution where it contained 2305·6 grains of free hydrochloric acid per gallon, and 3408·3 grains of iron per gallon (as Fe) in solution.

The wash waters from both vats and sheets or other articles are distinctly acid, and contain from 50 to 100 grains of iron (as Fe) in solution per gallon.

End Elevation.

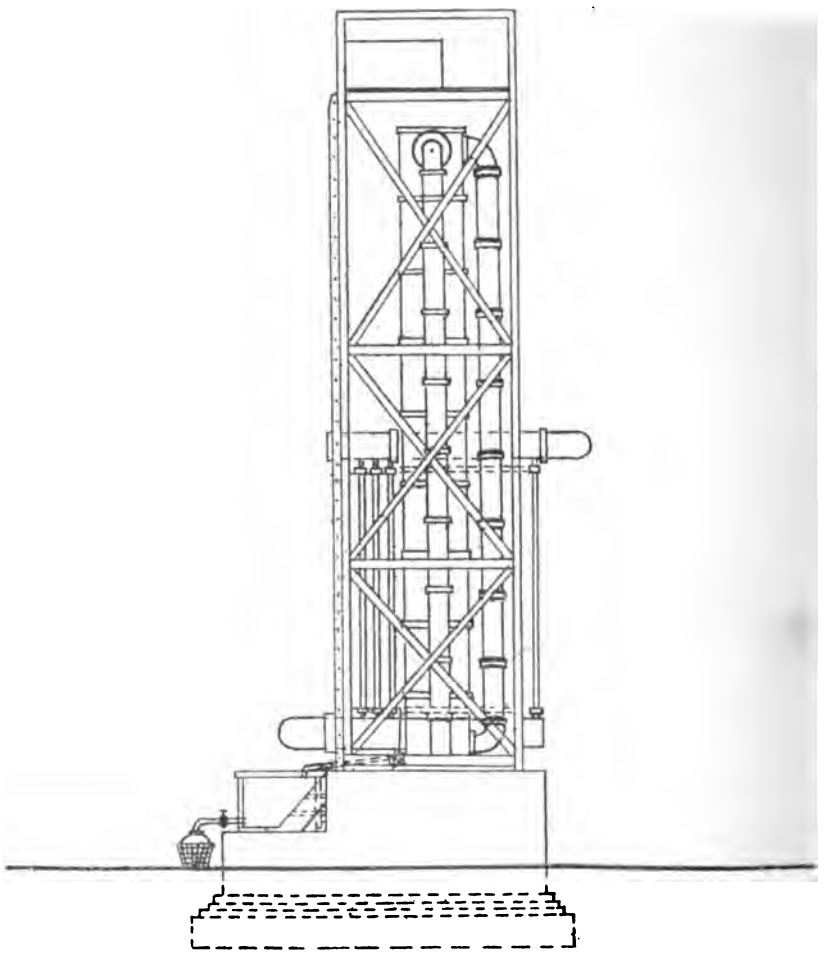

FIG. 117B.

Scale, $\frac{1}{8}$ inch = 1 foot.

At times there is an attempt to run in together wash waters and partially neutralised or decomposed pickle, and the discharges will contain anything between 200 and 700 grains of iron (as Fe) in solution or even more.

The inconvenience at sewage outfall works is not only the extra expense

of lime required, but the extra sludge formed is very considerable and is more difficult to dispose of, as its manurial nature bulk for bulk is diminished.

If the discharge is into a stream direct the results are disastrous. A coat of red oxide is soon formed on the banks and bed, and all vestige of visible life removed.

For the economical recovery of the metal and acid from the solution of iron salt many attempts have been made, though the bulk of the trade neutralisation by lime is still resorted to.

Mr T. Parker patented a method of treating sulphuric pickle electrolytically, or, more correctly, of securing a continuous regeneration of the pickling bath. To this end the pickling bath is provided with a chamber separated from it by means of a porous diaphragm in which an iron cathode is placed. In the main pickling vessel is an anode of lead, carbon, or other material not attacked by vitriol. The electrodes are connected with a current at about 2 to 5 volts pressure. In the separated chamber is placed a neutral solution of iron sulphate or waste pickle, and the pickling

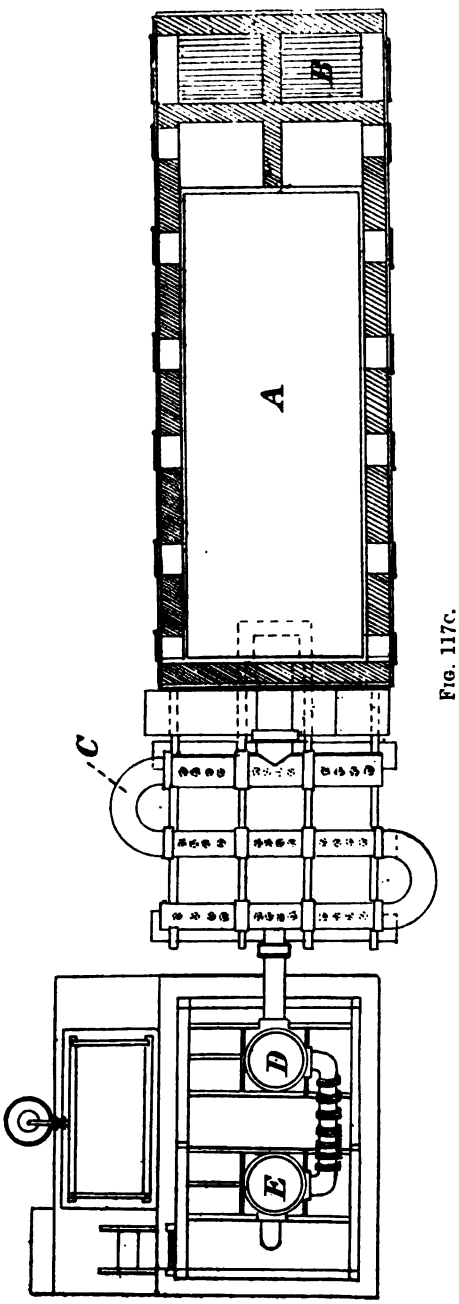

Sectional Plan.

FIG. 117c.
Scale, ½ inch = 1 foot.

bath is as usual. Iron is deposited on the cathode in the separated chamber —the equivalent of what is dissolved from the article in pickle, and the free acid equivalent is liberated at the anode in the pickling bath, so maintaining its condition.

So far as can be gathered from galvanisers who have tried it, the objections are:—

(1) Want of uniformity in the pickling—pitting and rough surfaces.
(2) Cost of current as compared with fresh acid.
(3) Peeling.

A method of recovering hydrochloric acid pickle, and one that has met with more success, seeing that it has been installed and in successful operation some years, is that of Mr Thos. Turner. In this process the pickle is fed into the hearth of a reverberating furnace A (fig. 117), in front of which at B a coke fire is kept burning.

On concentration ferric chloride is deposited, and upon hard firing hydrochloric acid passes with the fire products along the pipes C and is condensed in the ordinary muriatic towers D and E. The ferric chloride is fished forward at the hand holes in the furnace wall and the process kept going continually.

The iron oxide is of some value as fettling for puddling furnaces, yielding a few shillings per ton. The two furnaces at Messrs Walker Brothers' works together treat 1000 gallons of waste per day, yielding about 300 to 350 gallons per day of 75 per cent. commercial strength (29° Twaddell). Its actual strength Twaddell is not a reliable indication of its acidity, owing to the ferric chloride it contains, formed from particles of iron oxide which pass over in the draught and are dissolved by and come down with it. This in small quantities, however, is no drawback to the system, as the formation and elimination alternately of ferric chloride really form the cycle. An average sample of the acid contained 8·8 per cent. by weight of ferric chloride; and 10 parts by volume of the acid required for neutralisation contained 62·5 parts of normal alkali, its specific gravity being 1·115 or 23° Twaddell. The ferric oxide contained 97·6 per cent. of black magnetic oxide and 2 per cent. of carbon and ash. About one cwt. of the oxide is produced daily, and about four tons of coke are used every week. The ferric chloride in crystallising out in the pot does not always sink to the bottom immediately, but forms a scum on the surface, which, owing to the high temperature, is to a certain extent decomposed in the pot. A sample extracted from the surface contained—

	Per cent.
Ferric chloride,	53·40
Ferric oxide,	20·14
Moisture,	22·21
Carbon and insoluble matter,	4·01

Two men are required to attend to the plant, one being on duty during the day and the other at night. The average cost of recovery is about 8s. per ton.

Up to the present all attempts in the direction of rivers pollution prevention in the Black Country have resulted in but little so far as the galvanisers' pickle is concerned. In no other district of England, probably, do the industries so overlap each other—galvanised sheets, iron bars, fencing, harness, chains, general hardware—and in no other district probably do manufacturing interests as represented on the local governing bodies so preponderate. The particular classes of industry here followed are also very liable to suffer from both home and foreign competition, and it is therefore hardly surprising that efforts put forth to compel the traders to purify waste, the presence of which in streams is an eyesore rather than a nuisance, are not received with unanimous approval. The stage arrived at as yet appears to be no more than this—that the galvanising trade is prepared to neutralise the pickle with lime if the aggrieved authorities provide it, and if the canal companies will carry it to the point of application.

Various industries not referred to in this volume—such as the manufacture of Starch, Sugar, Jam, Pickles, Paints, etc.—produce waste liquids the general principles for the purification of which are outlined herein, though special circumstances may call for additional or modified treatment.

The author nevertheless trusts that the current practice as to preventing pollution caused by the commoner forms of liquid waste, together with hints as to the best modes of procedure in special cases, have been plainly set forth, and hopes to deal at a future date and in another volume with the utilisation and disposal of Trades Waste of a purely solid character.

THE END.

INDEX.

ACCRINGTON thermal-aërobic filters, 132.
Agitators and mixers for precipitants, 23.
Air compression, 40.
—— —— in stages, 43.
Air compressor at Roach Bridge Paper Mill, 47.
—— —— at Wolverhampton Sewage Works, 42.
—— —— Calladon's, 43.
—— —— common type, 41.
—— —— de la Vergne, 45.
—— —— Taylor's, 46.
Albuminoid ammonia, estimation of, 70.
Alkali waste, 237.
—— —— yellow liquors from, 245.
Allsopp's, Messrs, Brewery, Darwen, 149.
Alston Works, Bradford, potash recovery, 84.
Alumina-ferric, crude, 19.
Ammonia, estimation of albuminoid, 70.
Ammoniacal liquors, treatment of residues from, 230.
Anglo-Bavarian Brewery, Shepton Mallet, 149.

BACTERIAL treatment of bleach kier liquors, 154.
—— —— bleach works waste, 178.
—— —— brewery waste, 156.
—— —— crude beer, 156.
—— —— paper works waste, 223.
—— —— pot ale, 153.
—— —— starch solutions, 154.
—— —— tannery liquors, 143.
Baldwin's paper mill, King's Norton, 218.
Benedikt, Hans, form of settling tank, 26.
Bichromate of potash recovery, 198.
Biggart & Co., Ltd., works, Dalry, disposal of woollen suds at, 86.
'Birch' filter, 64.
Bleach kier liquors, bacterial filtration of, 154.
Bradford, city of, reports on wool scouring liquors, etc., 84, 86.
—— Corporation, special clause in Tramway and Improvement Act, 106.
Brewery, Anglo-Bavarian, Shepton Mallet, 149.
—— Clough Vale, 149.
—— Messrs Allsopp's, Darwen, 149.
—— Fountain Free Co., 162.
Brewery waste, examinations of, 146.
—— —— relative volumes of, 145.
Brinscall Print and Bleach Works, 165.
Brownroyd Wool Degreasing Co., Ltd., 123.
Burnley Paper Co., 218.

CALICO print and dye works, agglomeration of liquors, 181.
Callon, equation of motion, 17.
'Candy' clarifier, 58.
—— upward flow tank, 25, 27.
'Candy-Caink' sprinkler, 67.
Carbon bisulphide as a solvent for wool fat 112.
Chance's sulphur recovery process, 240.
Cholesterin, 75.
Chorley, making of precipitant at, 19.
Colliery wash waters, 248.
Compressed air economiser, Wolverhampton Sewage Works, 40.
—— —— for lifting sludge, 174.
Compression of air, 40.
Construction of precipitation tanks, 28.
Contact beds at Sutton, 126.
Copperas as a precipitant, 19.
'Cornish' steam pump, Evans', 49.
Cotton cloth, analyses of, 167.
Cox & Co., tanners, Yatton, Somerset, 10.

Crude alumina-ferric, 20.

DARWEN Paper Mill Co., 220.
Deiss's apparatus for extracting oils from seeds, 109.
Dibdin filters at Sutton, 126.
Distilleries on the Spey, 147.
Dumas, on standards of pollution, 14.

EFFLUENTS, general examination of, 67.
Ejector, 'Shone's,' 55.
Evans' 'Cornish' steam pump, 49.
—— 'Duplex' steam pump, 54.
—— 'Reliable' steam pump, 49.
Evaporation (multiple effect), 203.
Equation of motion—Hinckley, Callon, Marsaut, 17.
Examination of brewery waste, 146.
—— of effluents, 67.

FALLING particles in liquids, 15.
—— precipitates, 19.
Farington Sewage Works, 139.
Faulty construction of walls, 28.
Fawcett, Preston & Co.'s multiple effect evaporator, 204.
Field Head Mills, Bradford, grease recovery plant, 102.
Filter, the 'Birch,' 64.
—— the 'Riddell,' 60.
—— 'Thermal-aërobic' at Accrington, 132.
—— the 'Stoddart,' 131.
—— the 'Torrent,' 63.
Filtration of trades waste, 57.
Fleck, Dr H., standards of pollution, 11.
Floating bodies, pressure on, 16.
Fountains Free Brewery Co., 162.
Fox Bros., Messrs C. H., woollen mill, Wellington, Somerset, 90.
Fülner's stuff catcher, 25.

GALVANIZERS' waste, 258.
Gasch, Adolph, on trade refuse, 3.
Gases formed in septic tank, 130.
Glycerine recovery, 235.
Gould's triplex power stuff pump, 48.
Grafton & Co., Messrs, print works, 176.
Grease recovery, iron compounds for, 80.
—— separator or 'Centrifuger,' Messrs Fawcett, Preston & Co.'s, 98.
Griffin-Curtis reducing valve, 57.

HINCKLEY, F. W., equation of motion, 17.
Hook Norton Brewery Co., 156.
Hydrochloric acid recovery (Turner's process), 262.

INCRUSTATION by paper mill refuse, 222.
Indigo (Pin Croft) Dyeing Co., Adlington, 198.
Iron compounds for grease recovery, 80.
Isocholesterin, 76.
'Ives' tank, 36.

JENKINS, W. J., diagram from air compressor, 42.
Johnson's arrangement for sludge pressing, 39.

KEARNS, ALLEN & Co., Baxenden, Turkey red dyers, 198.
Kestner barometric evaporator, 209.
Klaus kiln, 243.

LACTIC fermentation, 147.
Liebig, Js. v., on standards, 13.
Lime as a precipitant, 18.
Lister, Messrs, & Co.'s works, Manningham (grease recovery), 103.
Long Ashton R. D. C. *v.* Cox & Co., tanners, 10.
Loss of weight in paper-making raw material, 216.
Low Mill Print Co., 196.

MALT EXTRACT, 145.
Marsaut, equation of motion, 17.
Mash tun wash, 145.
Massachusetts State Board of Health Reports, 126.
Mather & Platt's process at Standish Print Co., 195.
—— —— Heapey Bleach Works, Chorley, 25.
'Mather & Platt's' sprinkler, 67.
Merryweather's plant for distillation of wool grease, 91.
Mixers for precipitants, 23.
Motte, Messrs Alfred, & Co.'s works (disposal of suds from wool washing), 87.
Multiple effect evaporation, 203, 207.

NITRIFYING and nitrous ferments, 127.

OIL, extraction from seeds—Deiss's apparatus, 109.

PAPER-MAKERS' ASSOCIATION, circular issued by, 1.
Paper-making raw material, loss of weight in, 216.
—— mill refuse, 208.
—— —— —— admission to sewers, 221.
Parbold alkali waste drainage, 245.
Patent for the recovery of chrome, 15,208, 1896, 198.
—— treating galvanizers' pickle, 9632, 1899, 261.
—— treating wood sulphite liquors, 8088, 1901, 228.
Peebles' Paper Mill, Rishton and Whiteash, 220.
—— *v.* Oswaldtwistle U.D.C., 221.
Peel, Tootal & Co., Ltd., Calico Print Works, 178.
Petermann, Dr L., rivers pollution in Belgium, 5.
Pin Croft Indigo Dyeing Co., 198.
Porion evaporator, 210.
Pot ale or distillery refuse, 148.
Potash extraction from wool fat, 85.
Precipitant mixers, 23.
Precipitation, 18.
—— tanks, construction of, 28.
Pullman & Payne's patent liming process, 135.
Pulsometer Engineering Co.'s filter—the 'Torrent,' 63.
Pumps, 49–52.
—— 'Cornish,' 49.
—— Evans' 'Reliable,' 49.
—— 'Gould's,' 49.
—— 'Worthington,' 52.

RAG engine wash waters, 214.
Rankine, pressure on floating bodies, 16.
Recovery of bichromate of potash in dye works, 198.
—— glycerine from soap lyes, 235.
—— grease from scouring of wool, 78.
—— hydrochloric acid from galvanizers' pickle, 262.
—— indigo from dye vats, 198.
—— pulp from back water in paper mills, 214.
—— soda in paper mills, 203.
—— sulphocyanides, 232.
—— sulphur from alkali waste, 243.
—— water for re-use, 174.
Reducing valves for steam and compressed air, 56, 57.
Reichenbach's machine for solvent wool scouring, 116.
'Reliable' steam pump, Evans', 49.
Retaining walls for water, 28.
Richard-Lagerie, machine for potash extraction, 84.
'Riddell' filter, 60.
Riley & Sons, Hapton, sulphide oxidizing filters, 246.
Rittinger, Von P., particles falling in water, 16.
Rivers Pollutions Act, 1876, not administered, 2.
—— —— Commission, 1868, 2, 3, 6, 11.
Roach Bridge Paper Mill, air compressor at, 48.
Rylands' (Heapey) Bleach Works, Chorley, 25.

SCAIFE, Messrs W. & Co.'s, Works, treatment of suds, 94.
Septic treatment, 129.
'Shone's ejector' for sludge, 55, 174.
Size, (calico) weavers', 164.
Sludge, abstraction and disposal, 36, 37.
—— bleach works, 175.
Soap liquors at Messrs Grafton & Co.'s dye and print works, 189.
—— lyes, treatment of, 235.
Soda liquors from esparto grass and rags, 202.
—— recovery, 203.
Solid particles falling in liquids, 15.
Solids, estimation of, 69.
Solvent wool scouring machine (Reichenbach's), 116.
—— —— (Singer & Judell), 108.
Spey River, distilleries on, 147.
Spring Clough Brewery, Barrowford, 145.
Sprinkler, the 'Candy-Caink,' 67.
—— the 'Mather & Platt,' 67.
—— the 'Whittaker,' 68.
Standards of pollution, Belgium, 5.
—— of Rivers Pollution Commission, 11.
Standish Print Co., 195.
Stanning, Messrs John & Son, Ltd., Leyland, 172.
Starch liquors, bacterial filtration of, 156.
Steam pump, Evans' 'Cornish,' 49.
—— —— 'Reliable,' 49.

Steiner & Co., Messrs, Ltd., turkey red dyers, Church, 168.
'Stoddart' filter, 131.
Stuff pump, Gould's triplex power, 48.
Sulphate of alumina as a precipitant, 18.
Sulphocyanides, recovery of, 232.
Sulphur recovery, 243.
Sun Paper Mill, 218.
Sutton filters, 126.

TAN-PIT liquors, special treatment of, 143.
Tannery waste, 125.
Tanning, Pullman & Payne's liming process, 135.
Taylor's patent air compressor, 48.
'Thermal-aërobic' filters at Accrington, 132.
—— —— Farington, 139.
Turner's hydrochloric acid recovery process, 262.

VALVES (reducing, for compressed air), 56, 57.

WALLS, badly constructed, 29.
—— retaining, 28.
Wandel's fibre catcher, 214.
Wansbrough Paper Co., Cheddar, 216.
Wash waters from rag engines, 214.
Weavers' (calico) size, 164.
Weigelt, Dr, rivers pollution in Belgium, 5.
Whalley Abbey Printing Co., Ltd., 172.
'Whittaker' sprinkler, 68.
Wiggins, Teape & Co.'s mill, Chorley, 224.
Wolverhampton sewage works, air compression, 42.
Wood pulp mill refuse, 223.
—— sulphite liquors, 226.
Wool degreasing and recovery of grease, 72.
—— Degreasing Co., Brownroyd, 128.
—— fat, analyses of, 92.
—— method of examination of—
Chevreul, 73.
Lewkowitsch, 75.
Mansbridge, 91.
Marcker and Schulze, 75.
—— Products Recovery Co., Bradford, 96.
—— scouring liquors, Speight's works, 77.
—— —— Tankard, Scaife & Co., 77.
—— —— quoted from Rivers Pollution Commission Report, 78, 79.
—— —— solvent machines, Reichenbach's, 116.
—— —— Singer & Judell's, 112.
'Worthington' pump, 52.

YARYAN multiple effect evaporator, 207.
Yolk from wool, Havrez's method of utilising, 84.

PRINTED BY NEILL AND CO., LTD., EDINBURGH.